ET74LVC08A - Quadruple 2-Input AND Gates

General Description

The ET74LVC08A contains four independent 2-input AND gates operating from a 1.65 to 5.5 V supply.

Features

- Wide Operating Voltage Range:1.65 V to 5.5 V
- 24 mA Balanced Output Sink and Source Capability
- ESD Protection:

  --HBM JESD22-A114-A Exceeds 2000 V

  --CDM JESD22-C101-A Exceeds 1000 V
- Latch-up Performance Exceeds 200 mA
- Packages offered: SOP14/TSSOP14

Device Information

Part No.	Package	Packing Option	MSL
ET74LVC08AM14	SOP14 (8.65*6mm)	Tape and Reel, 4K	3
ET74LVC08AV	TSSOP14 (4.96*6.4mm)	Tape and Reel, 4K	3

Applications

- Mobile Device

Pin Configuration

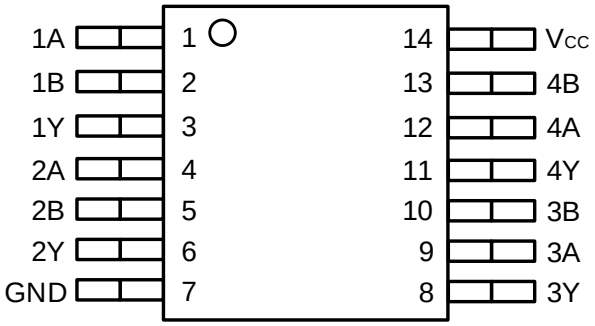

ET74LVC08AM14

ET74LVC08AV

Figure1. Top View

Pin Function

Pin		I/O	Description
Name	No.		
1A	1	Input	Channel 1, Input A
1B	2	Input	Channel 1, Input B
1Y	3	Output	Channel 1, Output Y
2A	4	Input	Channel 2, Input A
2B	5	Input	Channel 2, Input B
2Y	6	Output	Channel 2, Output Y
GND	7	—	Ground
3Y	8	Output	Channel 3, Output Y
3A	9	Input	Channel 3, Input A
3B	10	Input	Channel 3, Input B
4Y	11	Output	Channel 4, Output Y
4A	12	Input	Channel 4, Input A
4B	13	Input	Channel 4, Input B
V_{CC}	14	—	Positive Supply

Block Diagram

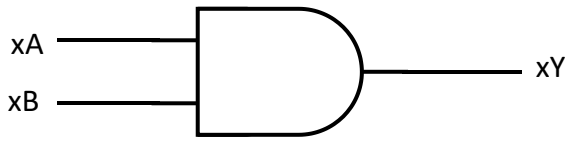

Figure2. Logic Symbol

Functional Description

Function Table

Input		Output
xA	**xB**	**xY**
L	L	L
L	H	L
H	L	L
H	H	H

Absolute Maximum Ratings

Over operating free-air temperature range (unless otherwise noted)

Symbol	Parameter		Value	Unit
V_{CC}	Supply Voltage		−0.5 to 6.5	V
V_I	Input Voltage		−0.5 to 6.5	V
V_O	Output Voltage		−0.5 to V_{CC}+0.5	V
I_{IK}	Input Clamp Current (1)	V_I < -0.5V	-50	mA
I_{OK}	Output Clamp Current (1)	V_O < -0.5V	-50	mA
I_O	Continuous Output Current		±50	mA
I_{CC}	Continuous Current through V_{CC} or GND		±100	mA
T_J	Max Junction Temperature		150	°C
T_{LEAD}	Lead Temperature (Soldering 10s)		300	°C
T_{STG}	Storage Temperature		−65 to 150	°C
V_{ESD}	Human Body Model (EIA/JESD22−A114−A)		±2000	V
	Charged Device Model (EIA/JESD22−C101−A)		±1000	
I_{LU}	Max Latch up Current Above V_{CC} and GND at 125°C (EIA/JESD78)		±200	mA

Note1: The input and output voltage ratings may be exceeded if the input and output current ratings are observed.

Recommended Operating Conditions

Symbol	Parameter	Conditions	Min	Max	Unit
V_{CC}	Supply Voltage	Operating	1.65	5.5	V
		Data retention only	1.5		V
V_{IH}	High-level Input Voltage	V_{CC} = 1.65 V to 1.95 V	0.65 × V_{CC}		V
		V_{CC} = 2.3 V to 2.7 V	1.7		V
		V_{CC} = 2.7 V to 3.6 V	2		V
		V_{CC} = 3.6 V to 5.5 V	2		V
V_{IL}	Low-level Input Voltage	V_{CC} = 1.65 V to 1.95 V		0.35 × V_{CC}	V
		V_{CC} = 2.3 V to 2.7 V		0.7	V
		V_{CC} = 2.7 V to 3.6 V		0.8	V
		V_{CC} = 3.6 V to 5.5 V		0.8	V
I_{OH}	High-level Output Current	V_{CC} = 1.65 V	-4		mA
		V_{CC} = 2.3 V	-8		mA
		V_{CC} = 2.7 V	-12		mA
		V_{CC} = 3 V	-24		mA
		V_{CC} = 5.5 V	-24		mA
I_{OL}	Low-level Output Current	V_{CC} = 1.65 V		4	mA
		V_{CC} = 2.3 V		8	mA
		V_{CC} = 2.7 V		12	mA
		V_{CC} = 3 V		24	mA
		V_{CC} = 5.5 V		24	mA
T_A	Ambient Temperature	Operating in Free Air	-40	125	°C

Electrical Characteristics

DC Electrical Characteristics

Over operating free-air temperature range; typical values measured at T_A = 25°C (unless otherwise noted)

Symbol	Parameter	Condition		V_{CC}	Operating Free-air Temperature (T_A)						Unit
					T_A=25°C		-40°C≤T_A≤85°C		-40°C≤T_A≤125°C		
					Min	Max	Min	Max	Min	Max	
V_{OH}	High−level Output Voltage	V_I = V_{IH} or V_{IL}	I_{OH} =-100μA	1.65V to 5.5V	V_{CC} - 0.2		V_{CC} - 0.2		V_{CC} - 0.2		V
			I_{OH} =-4mA	1.65V	1.29		1.2		1.05		
			I_{OH} =-8mA	2.3V	1.9		1.7		1.55		
			I_{OH} =-12mA	2.7V	2.2		2.2		2.05		
				3V	2.4		2.4		2.25		
			I_{OH} =-24mA	3V	2.3		2.2		2		
				5.5V	4.8		4.7		4.5		
V_{OL}	Low−level Output Voltage	V_I = V_{IH} or V_{IL}	I_{OL} =100μA	1.65V to 5.5V		0.1		0.2		0.3	V
			I_{OL} =4mA	1.65V		0.24		0.45		0.6	
			I_{OL} =8mA	2.3V		0.3		0.7		0.85	
			I_{OL} =12mA	2.7V		0.4		0.4		0.6	
			I_{OL} =24mA	3V		0.55		0.55		0.8	
				5.5V		0.55		0.55		0.8	
I_I	Input Leakage Current	V_I = V_{CC} or 0		5.5V		±1		±5		±20	μA
I_{CC}	Supply Current	V_I = V_{CC} or 0	I_O = 0	5.5V		1		10		40	μA
ΔI_{CC}		One input at V_{CC} - 0.6V, Other inputs at V_{CC} or GND		1.65V to 5.5V		500		500		5000	μA
C_I	Input Capacitance	V_I = V_{CC} or 0		5.5V		5					pF

Switching Characteristics

Over operating free-air temperature range; typical values measured at T_A = 25°C (unless otherwise noted)

Symbol	Parameter	From	To	V_{CC}	Operating Free-air Temperature (T_A)							Unit
					T_A=25°C			-40°C≤T_A≤85°C		-40°C≤T_A≤125°C		
					Min	Typ	Max	Min	Max	Min	Max	
t_{PD}	Propagation Delay	A or B	Y	1.8 V ± 0.15 V	1	10.5	18	1	20	1	21.5	ns
				2.5 V ± 0.2 V	1	7.5	9	1	10	1	11.5	
				2.7 V	1	7.7	9	1	10	1	10.5	
				3.3 V ± 0.3 V	1	4.7	6	1	7	1	7.5	
				5.5 V		4.6	5		6		6.5	
$T_{sk(o)}$				3.3 V ± 0.3 V					1		1	ns

Operating Characteristics

Over operating free-air temperature range; typical values measured at T_A = 25°C (unless otherwise noted)

Symbol	Parameter	Condition	V_{CC}	Min	Typ	Max	Unit
C_{PD}	Power Dissipation Capacitance Gate	No Load	1.8 V		7		pF
			2.5 V		9.8		pF
			3.3 V		10		pF
			5.5 V		13		pF

Parameter measurement information

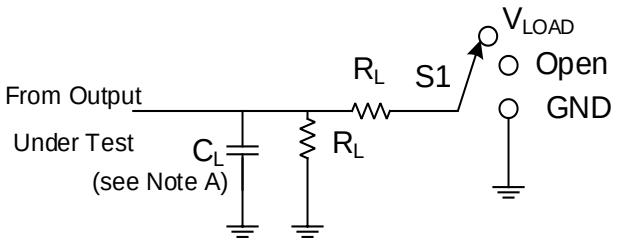

TEST	S1
t_{PLH}/t_{PHL}	V_{LOAD}
t_{PLZ}/t_{PZL}	V_{LOAD}
t_{PHZ}/t_{PZH}	GND

Figure.3 Test circuit for measuring switching times

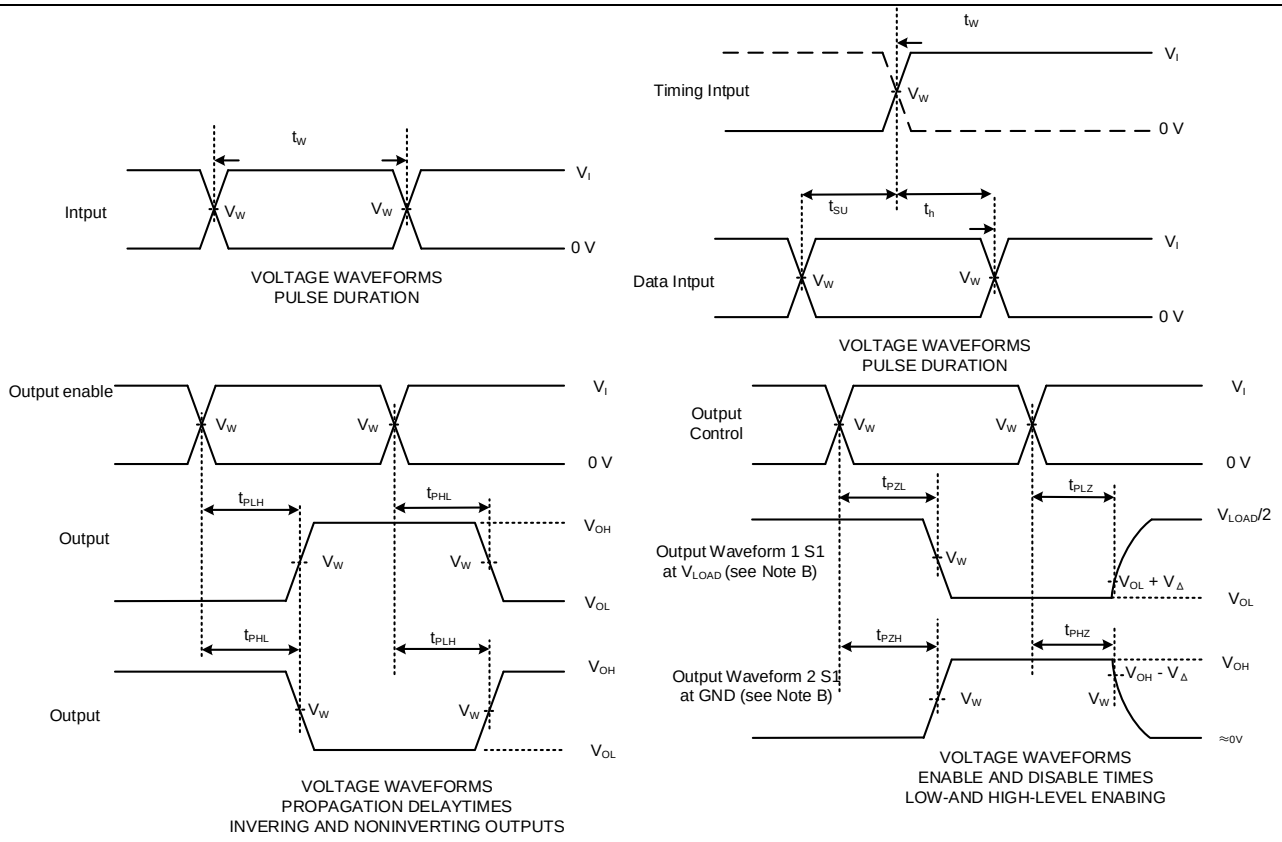

Notes:

A. C_L includes probe and jig capacitance.

B. Waveform 1 is for an output with internal conditions such that the output is low, except when disabled by the output control.

C. Waveform 2 is for an output with internal conditions such that the output is high, except when disabled by the output control.

D. All input pulses are supplied by generators having the following characteristics:

PRR ≤10 MHz, Z_O = 50 Ω

E. The outputs are measured one at a time, with one transition per measurement.

F. t_{PLZ} and t_{PHZ} are the same as t_{dis}.

G. t_{PZL} and t_{PZH} are the same as t_{en}.

H. t_{PLH} and t_{PHL} are the same as t_{pd}.

I. All parameters and waveforms are not applicable to all devices.

Figure.4 Input to output propagation delay times

V_{CC}	Input		V_M	V_{LOAD}	C_L	R_L	V_Δ
	V_I	t_r/t_f					
1.8V ± 0.15V	V_{CC}	≤ 2ns	$V_{CC}/2$	2 × V_{CC}	30pF	1kΩ	0.15V
2.5V ± 0.2V	V_{CC}	≤ 2ns	$V_{CC}/2$	2 × V_{CC}	30pF	500Ω	0.15V
2.7V	2.7V	≤ 2.5ns	1.5V	6V	50pF	500Ω	0.3V
3.3V ± 0.3V	2.7V	≤ 2.5ns	1.5V	6V	50pF	500Ω	0.3V
5.5V	V_{CC}	≤ 2.5ns	$V_{CC}/2$	2 × V_{CC}	50pF	500Ω	0.3V

Package Dimension

TSSOP14

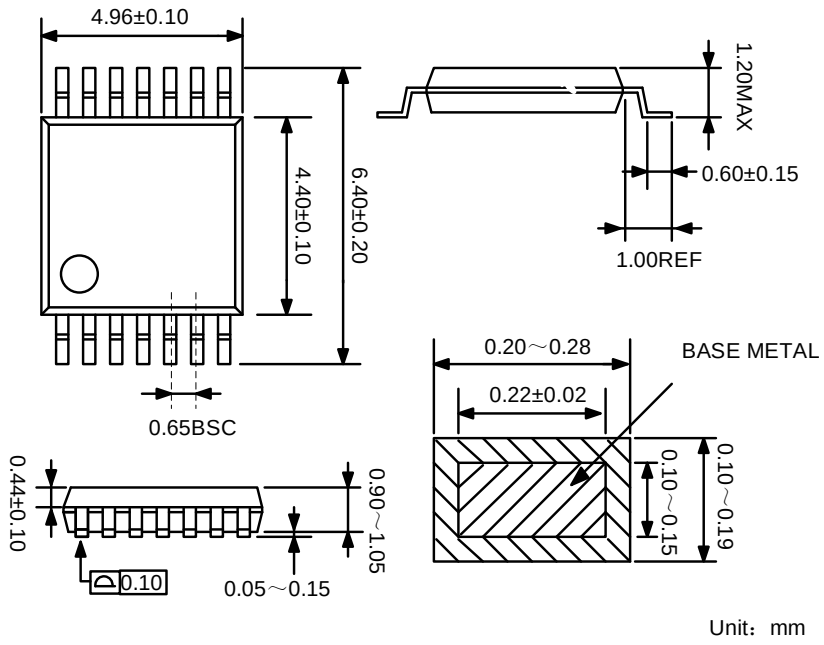

SOP14

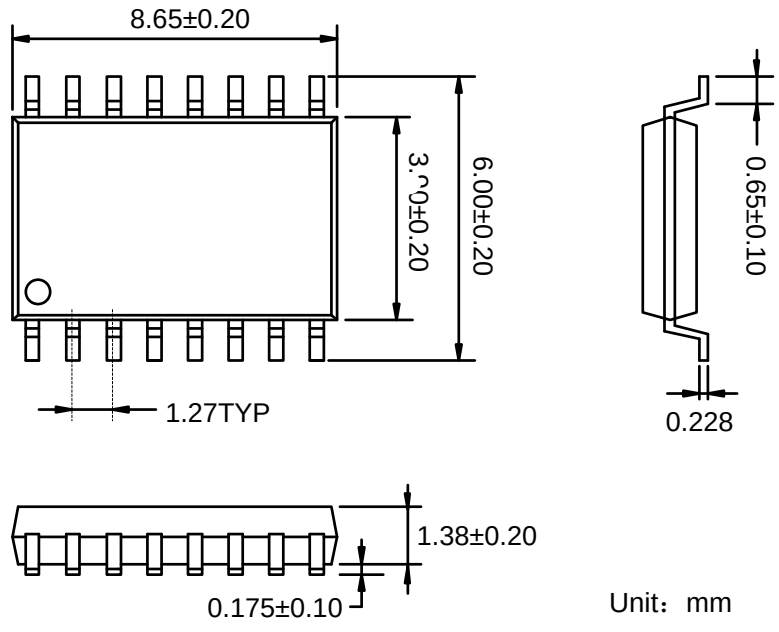

Tape Information

TSSOP14

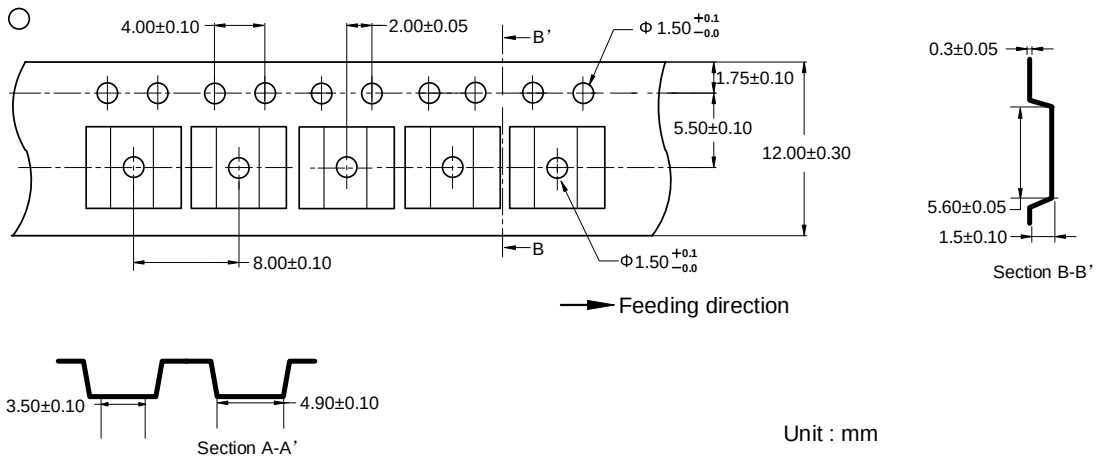

SOP14

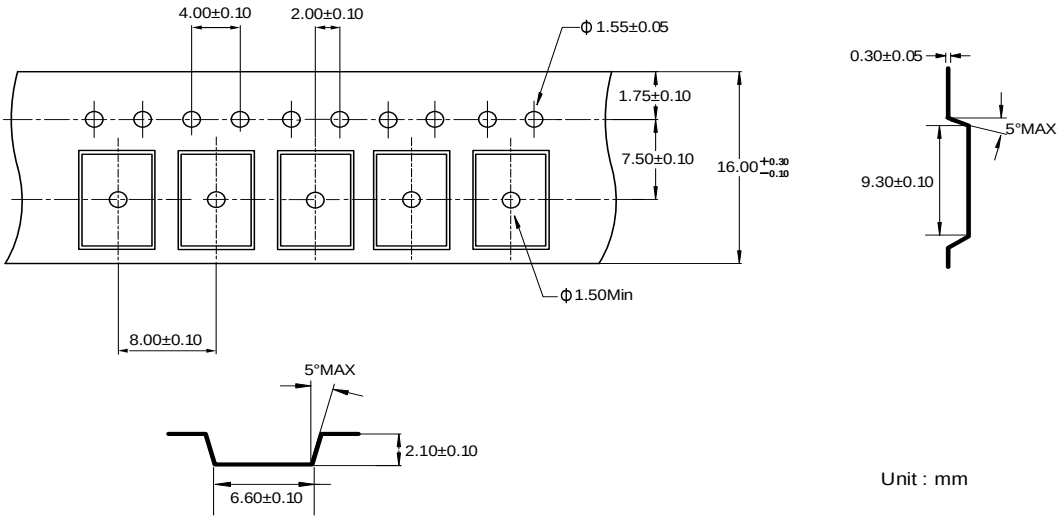

Marking Information

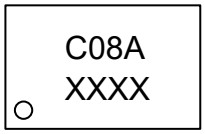

C08A - Part Number

XXXX - Tracking Number

Revision History and Checking Table

Version	Date	Revision Item	Modifier	Function & Spec Checking	Package & Tape Checking
0.0	2025-02-13	Preliminary Version	Wangar	Tugz	Liujy
1.0	2025-6-19	Official Version	Yuyf	Tugz	Liujy