5.5V 2A 38mΩ Load Switch with Reverse Current Protection and Controlled Turn On

General Description

The ET35613 is a single load switch with reverse current protection and controlled turn-on. The device can operate from 1V to 5.5V single supply and has the ability to drive up to 2A continuous current.

The device contains a 38mΩ low R_{ON} N-MOSFET controlled by the ON pin. When the power supply is turned on for the first time, a smart pull-down resistor is used to float the ON pin until the system is stable. Once the ON pin reaches a high voltage (> V_{IH}), the pull-down resistor is disconnected, then the standby current is very low and power loss can be reduced. The small package and low R_{ON} make the device very suitable for space limited, battery powered applications.

The device supports a wide input voltage range, which is suitable for many different voltage rails. The rise time is used to avoid inrush current.

Features

- Input Voltage Range: 1.0V to 5.5V
- Maximum Continuous Current: 2A
- Ultra-Low On-Resistance
  -- R_{ON} = 38mΩ @ V_{IN} = 5V
  -- R_{ON} = 38mΩ @ V_{IN} = 3.3V
- Low Shutdown Current: 140nA (TYP)
- Low Threshold 1.8V GPIO Control Input
- Controlled Slew Rate to Avoid Inrush Current
- Bi-directional Power Supplier for Power Zone Application
- Part No. and Package Information

Part No.	Package	Packaging Option	MSL
ET35613	WLCSP4 (0.762mm × 0.762mm)	Tape and Reel, 3K	Level 1
ET35613Y	DFN4 (1.0mm × 1.0mm)	Tape and Reel, 10K	Level 1
ET35613L	SOT23-5 (1.6mm × 2.9mm)	Tape and Reel, 3K	Level 3

Applications

- Smartphone
- Notebook Computer and Ultrabook
- Tablet PC Computer
- Solid State Drive (SSD)
- DTV / IP Set Top Box
- POS Terminal and Media Gateway
- Wearable Technology

Pin Configuration

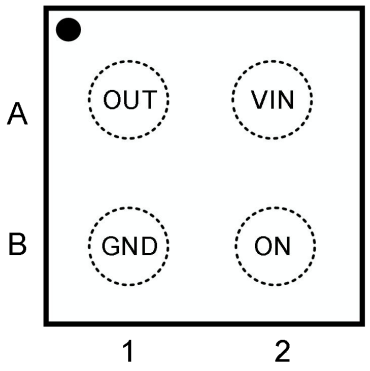

WLCSP4 (0.762mm × 0.762mm)

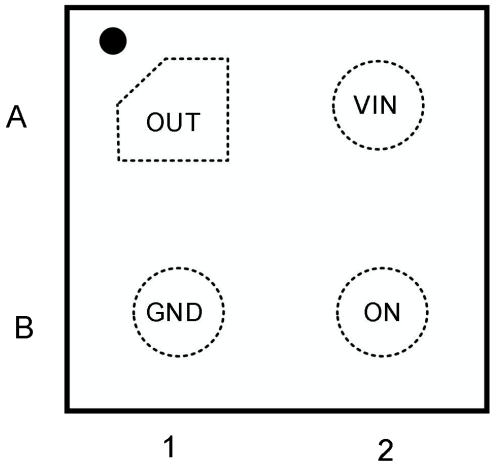

DFN4 (1.0mm × 1.0mm)

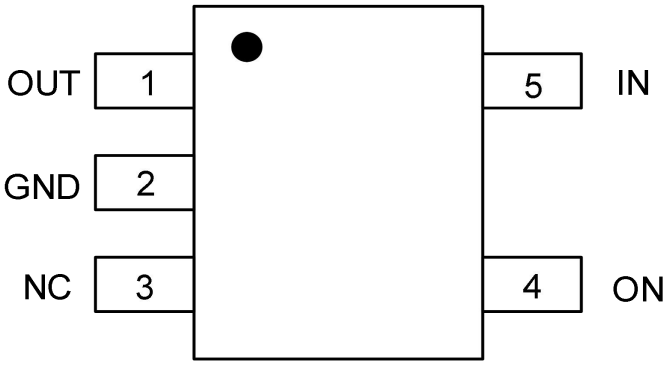

SOT23-5 (1.6mm × 2.9mm)

Figure 1. Top View

Pin Function

Pin Name		Symbol	Pin Description
DFN4	WLCSP4		
A1		OUT	Switch Output.
A2		IN	Switch Input. Use a bypass capacitor (ceramic) to ground.
B1		GND	Ground.
B2		ON	Switch Control Input. Do not float this pin. Logic high turns on power switch

Pin Name	Symbol	Pin Description
SOT23-5		
1	OUT	Switch Output.
2	GND	Ground.
3	NC	No Connection.
4	ON	Switch Control Input. Do not float this pin. Logic high turns on power switch
5	IN	Switch Input. Use a bypass capacitor (ceramic) to ground.

Block Diagram

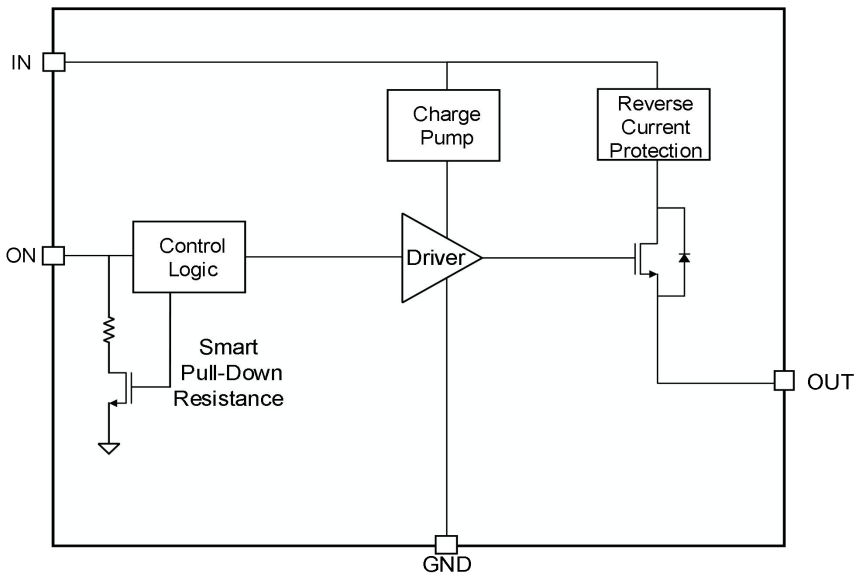

Figure 2. Functional Block Diagram

Functional Description

The ET35613 is a small, 4-ball, 2A load switch. A low on-resistance N-MOSFET is integrated, which makes a low voltage drop across the device. To choose suitable rise time is always used to avoid inrush current.

ON/OFF Control

The ON pin can control the device. Pulling the ON pin high enables the device. Logic high of V_{IH} on the ON pin will enable the device and V_{IL} will turn off it. It has the ability to interface with low-voltage GPIO. It can support with 1.8V, 2.5V, 3.3V GPIOs.

Table 1. Function Table

ON State	V_{IN} to V_{OUT}
L	Off
H	On

Table 2. Smart-ON Functional Modes

ON	ON Pin
Below V_{IL}	Pull-Down Active
Above V_{IH}	No Pull-Down

Reverse Current Protection

The device monitor VIN and VOUT voltage levels. When the reverse current voltage threshold (VRCP) is exceeded, the switch is disabled, so as to prevent any reverse current flow to VIN. This feature is particularly useful when the outputs of ET35613 need to be driven by another voltage source.

Figure 3 demonstrates the ideal behavior of reverse current protection circuit in ET35613. After the device is disabled via the ON pin and VOUT pin is forced to an external voltage V_{FORCE}, a very small amount of current given by I_{RC_VIN}, V_{IN} will flow from V_{OUT} to V_{IN}. This will prevent any extra current loading on the voltage source supplying the V_{FORCE} voltage.

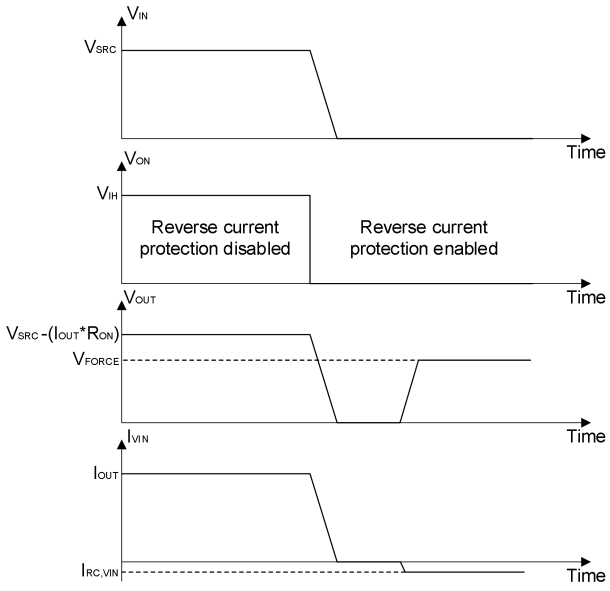

I_{VIN} = Current through V_{IN} pin

V_{SRC} = Input voltage applied to the device

V_{FORCE} = External voltage source forced at VOUT pin of the device

I_{OUT} = Output load current

Figure 3. The Ideal Behavior of Reverse Current Protection Circuit in ET35613

Application Information

Input Capacitor

It is recommended to place a capacitor (C_{IN}) between IN and GND pins of ET35613. This capacitor helps to limit the voltage drop on the input voltage supply when the switch turns ON into a discharged load capacitor. A 1μF ceramic capacitor that is placed close to the IC pins is usually sufficient. Higher values of C_{IN} can be used to further reduce the voltage drop in high current applications.

Output Capacitor

It is recommended to place a capacitor (C_{OUT}) between OUT and GND pins of ET35613. This capacitor acts as a low pass filter along with the switch ON-resistance to remove any voltage glitches coming from the input voltage source. It is generally recommended to have C_{IN} greater than C_{OUT} so that once the switch is turned ON, C_{OUT} can charge up to V_{IN} without V_{IN} dropping significantly. A 0.1μF ceramic capacitor that is placed close to the IC pins is usually sufficient.

Standby Power Reduction

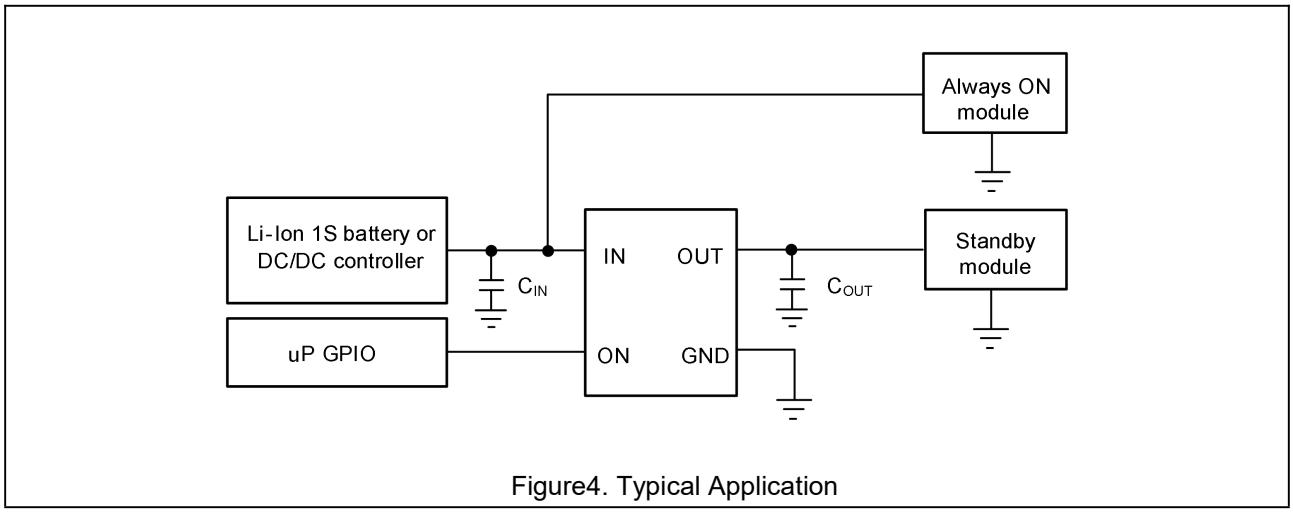

Figure4. Typical Application

Any end equipment that is being powered from the battery has a need to reduce current consumption in order to keep the battery charged for a longer time. ET35613 helps to accomplish this by turning off the supply to the modules that are in standby state and hence significantly reduces the leakage current overhead of the standby modules.

Power Supply Sequencing Without a GPIO Input

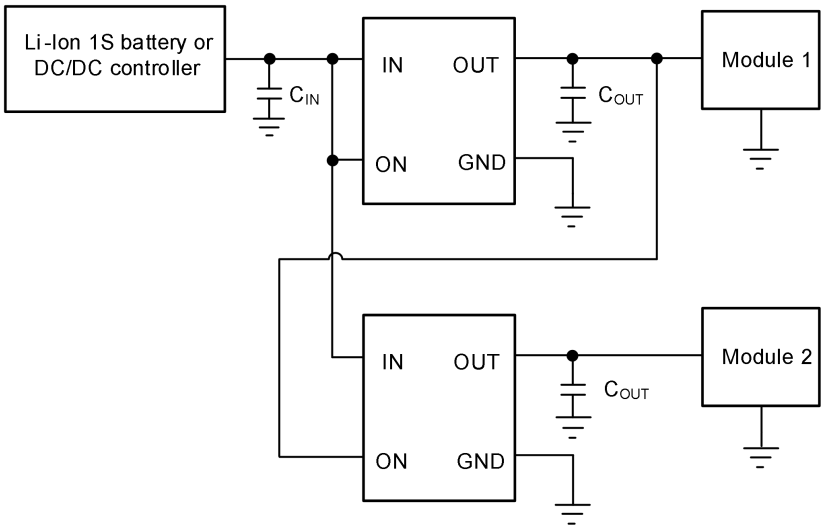

Figure 5. Power Supply Sequencing Without a GPIO Input

In many end equipment, there is a need to power up various modules in a predetermined manner. ET35613 can solve the problem of power sequencing without adding any complexity to the overall system. Figure5 shows the configuration required for powering up two modules in a fixed sequence. The output of the first load switch is tied to the enable of the second load switch, so when Module 1 is powered the second load switch is enabled and Module 2 is powered.

Typical Application

ET35613 is an ultra-low ON-resistance, 2A integrated load switch that is capable of interfacing directly with 1S battery in portable consumer devices such as smartphones, tablets etc. Its wide input voltage range (1V to 5.5V) makes it suitable to be used for lower voltage rails as well inside different end equipment to accomplish power sequencing, inrush current control and reducing leakage current in subsystems that are in standby mode.

Figure 6 shows the typical application circuit of ET35613.

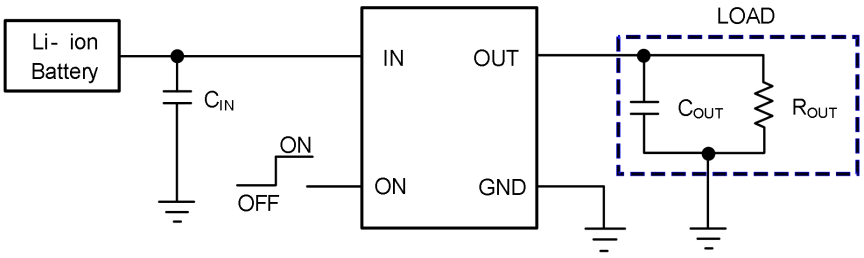

Figure 6. Typical Application Circuit

Power Supply Recommendations

The device is designed to operate with a V_{IN} range of 1V to 5.5V. This supply must be well regulated and placed as close to the device terminal as possible with the recommended 1μF bypass capacitor.
If the supply is located more than a few inches from the device terminals, additional bulk capacitance may be required in addition to the ceramic bypass capacitors. If additional bulk capacitance is required, an electrolytic, tantalum, or ceramic capacitor of 10μF may be sufficient.

Absolute Maximum Ratings

Over operating free-air temperature range (unless otherwise noted)

Symbol	Parameter	Rating	Unit
V_{IN}	Input Voltage Range	-0.3 to 6.0	V
V_{OUT}	Output Voltage Range	-0.3 to 6.0	V
V_{ON}	ON Pin Voltage Range	-0.3 to 6.0	V
I_{MAX}	Maximum Continuous Switch Current	2.0	A
I_{PLS}	Maximum Pulsed Switch Current, Pulse < 300us, 2% Duty Cycle	2.5	A
T_{JMAX}	Maximum Junction Temperature	150	°C
T_{STG}	Storage Temperature Range	-65 to 150	°C
V_{ESD}	Human-Body Model (HBM)	±4000	V
	Charged-Device Model (CDM)	±1000	V

Recommended Operating Conditions

Symbol	Parameter	Min	Typ	Max	Unit
V_{IN}	Input Voltage Range	1		5.5	V
V_{OUT}	Output Voltage Range	0		5.5	V
C_{IN}	Input Capacitor		1[(1)]		μF
T_A	Operating Free Air Temperature Range	-40		85	°C

Note1: Refer to the application information.

Electrical Characteristics

(Typical values are at T_A = 25°C, V_{IN} = 1V to 5.5V. unless otherwise noted.)

Symbol	Parameter	Conditions	Min	Typ	Max	Unit
V_{IN}	Input Voltage Range		1		5.5	V
I_Q	Quiescent Current	V_{IN} = V_{ON} = 5.0V, I_{OUT} = 0mA		280	650	nA
		V_{IN} = V_{ON} = 3.3V, I_{OUT} = 0mA		220	500	
		V_{IN} = V_{ON} = 1.0V, I_{OUT} = 0mA		140	350	
I_{SD}	Shutdown Current	V_{ON} = 0V, V_{IN} = 5.5V, T_A = 25°C		140	500	nA
$I_{LEAKAGE}$	Supply Leakage Current in Shutdown Mode	V_{ON} = 0V, V_{IN} = 5.5V, V_{OUT} = 0V, T_A = 25°C			500	nA
R_{ON}	On-Resistance (WLCSP4 and DFN4)	V_{IN} = 5V, V_{ON} = 1.2V, I_{OUT} = -200mA		38	60	mΩ
		V_{IN} = 3.3V, V_{ON} = 1.2V, I_{OUT} = -200mA		38	60	
	On-Resistance (SOT23-5)	V_{IN} = 5V, V_{ON} = 1.2V, I_{OUT} = -200mA		78	100	
		V_{IN} = 3.3V, V_{ON} = 1.2V, I_{OUT} = -200mA		78	100	
I_{ON}	ON Pin Leakage Current	V_{ON} = V_{IN} = 5.5V		10	420	nA
V_{RCP}	Reverse Current Voltage Threshold	V_{IN} = 1.0V to 5.5V		120		mV
I_{RC}	Reverse Current When Disabled	V_{IN} = V_{ON} = 0V, V_{OUT} = 5V, Measure Input leakage		0.02	1.5	μA
R_{PD_ON}	Smart Pull-Down Resistance	Disabled		1.2	3.0	MΩ
V_{IL}	ON Pin Input Low Voltage				0.4	V
V_{IH}	ON Pin Input High Voltage		0.9			V

Switching Characteristics

T_A = 25°C, unless otherwise noted.

Parameter		Conditions	Min	Typ	Max	Unit
V_{IN} = 5.0V						
t_{ON}	Turn-On Time	R_{OUT} = 10Ω, C_{IN} = 1μF, C_{OUT} = 0.1μF		165	450	μs
t_{OFF}	Turn-Off Time	R_{OUT} = 10Ω, C_{IN} = 1μF, C_{OUT} = 0.1μF		3		
t_R	V_{OUT} Rise Time	R_{OUT} = 10Ω, C_{IN} = 1μF, C_{OUT} = 0.1μF		110		
t_F	V_{OUT} Fall Time	R_{OUT} = 10Ω, C_{IN} = 1μF, C_{OUT} = 0.1μF		2		
t_D	Delay Time	R_{OUT} = 10Ω, C_{IN} = 1μF, C_{OUT} = 0.1μF		145		
V_{IN} = 3.3V						
t_{ON}	Turn-On Time	R_{OUT} = 10Ω, C_{IN} = 1μF, C_{OUT} = 0.1μF		110	350	μs
t_{OFF}	Turn-Off Time	R_{OUT} = 10Ω, C_{IN} = 1μF, C_{OUT} = 0.1μF		4		
t_R	V_{OUT} Rise Time	R_{OUT} = 10Ω, C_{IN} = 1μF, C_{OUT} = 0.1μF		130		
t_F	V_{OUT} Fall Time	R_{OUT} = 10Ω, C_{IN} = 1μF, C_{OUT} = 0.1μF		2		
t_D	Delay Time	R_{OUT} = 10Ω, C_{IN} = 1μF, C_{OUT} = 0.1μF		70		

Switching Waveform

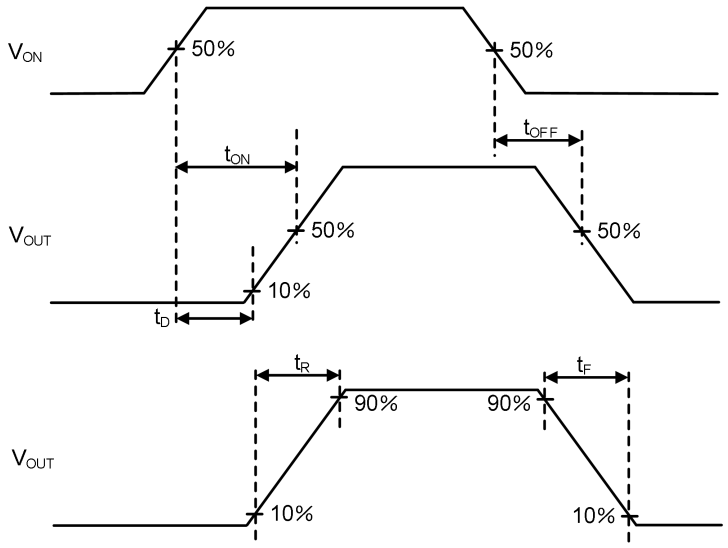

Figure 7. Timing Diagram

Package Dimension

WLCSP4 (0.762mm × 0.762mm)

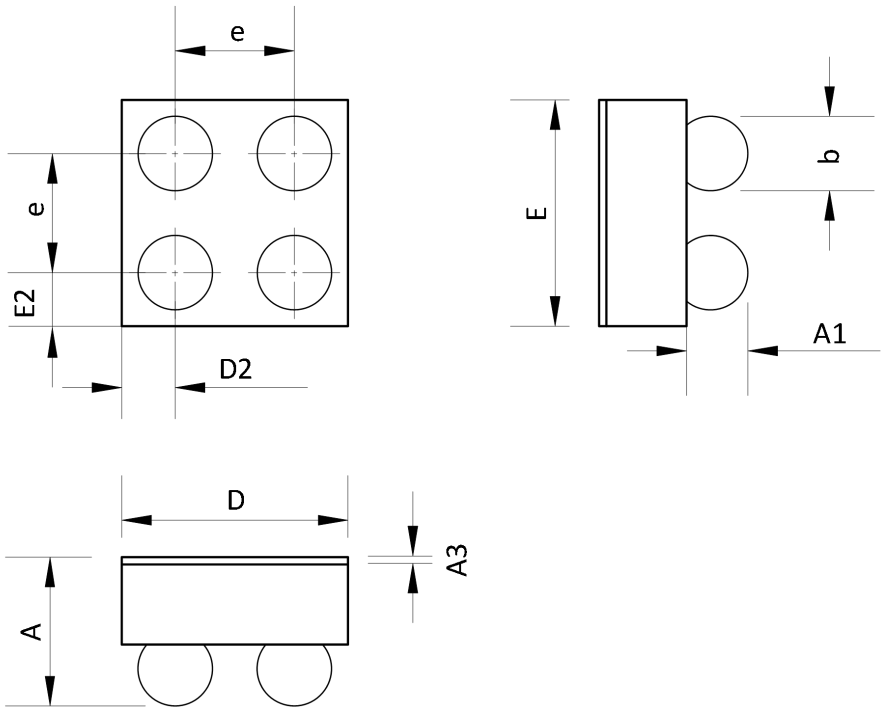

COMMON DIMENSIONS

(Unit: mm)

SYMBOL	MIN	NOM	MAX
A	0.4205	0.450	0.4795
A1	0.068	0.080	0.092
A3	0.020	0.025	0.030
b	0.216	0.240	0.264
D	0.737	0.762	0.787
E	0.737	0.762	0.787
D2	0.181 REF		
E2	0.181 REF		
e	0.400 BSC		

DFN4 (1.0mm × 1.0mm)

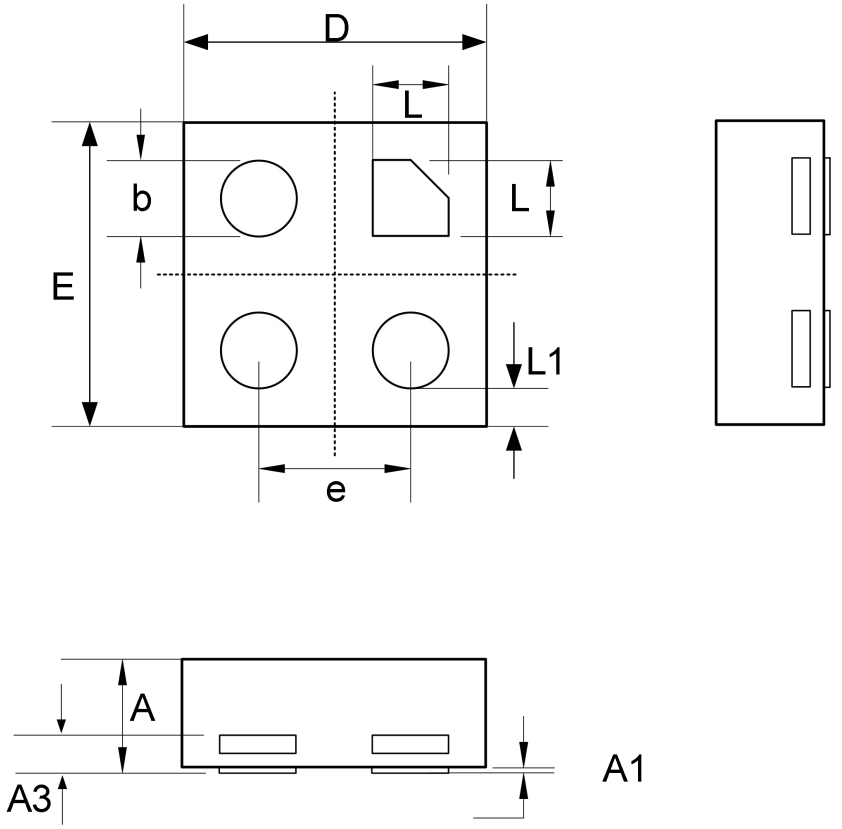

COMMON DIMENSIONS

(Unit: mm)

SYMBOL	MIN	NOM	MAX
A	0.500	0.550	0.600
A1	0.00	0.02	0.05
A3		0.127REF	
b	0.180	0.230	0.280
D	0.90	1.00	1.10
E	0.90	1.00	1.10
L	0.180	0.230	0.280
e	0.450	0.500	0.550
L1		0.135REF	

SOT23-5 (1.6mm × 2.9mm)

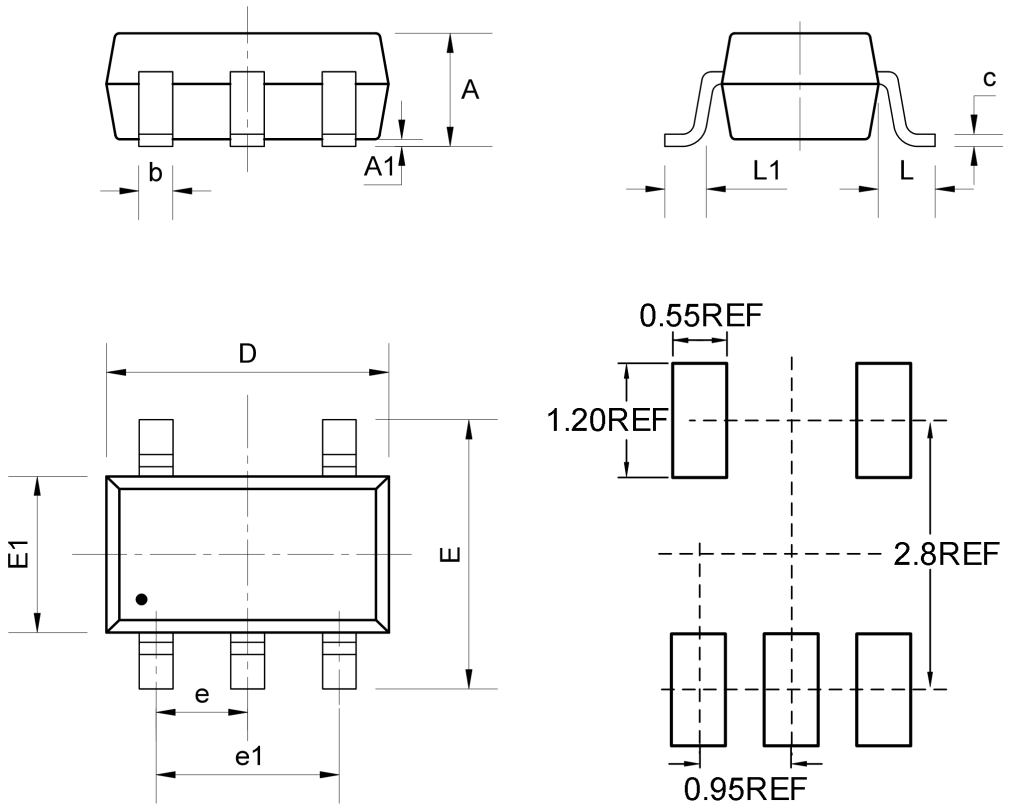

COMMON DIMENSIONS

(Unit: mm)

SYMBOL	MIN	NOM	MAX
A	-	-	1.45
A1	0.00	-	0.15
b	0.28	0.35	0.50
c	0.08	0.15	0.22
D	2.75	2.9	3.05
e	0.90	0.95	1.00
e1	1.80	1.90	2.00
E	2.60	2.80	3.00
E1	1.45	1.6	1.75
L	0.60REF		
L1	0.30	0.45	0.60

Tape Information

WLCSP4 (0.762mm × 0.762mm)

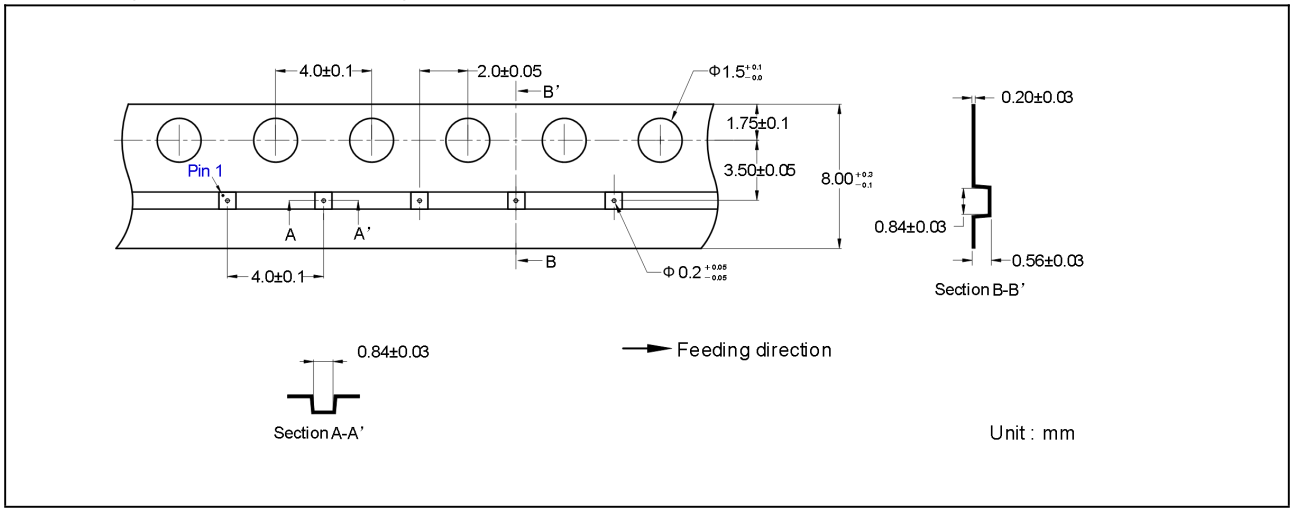

DFN4 (1.0mm × 1.0mm)

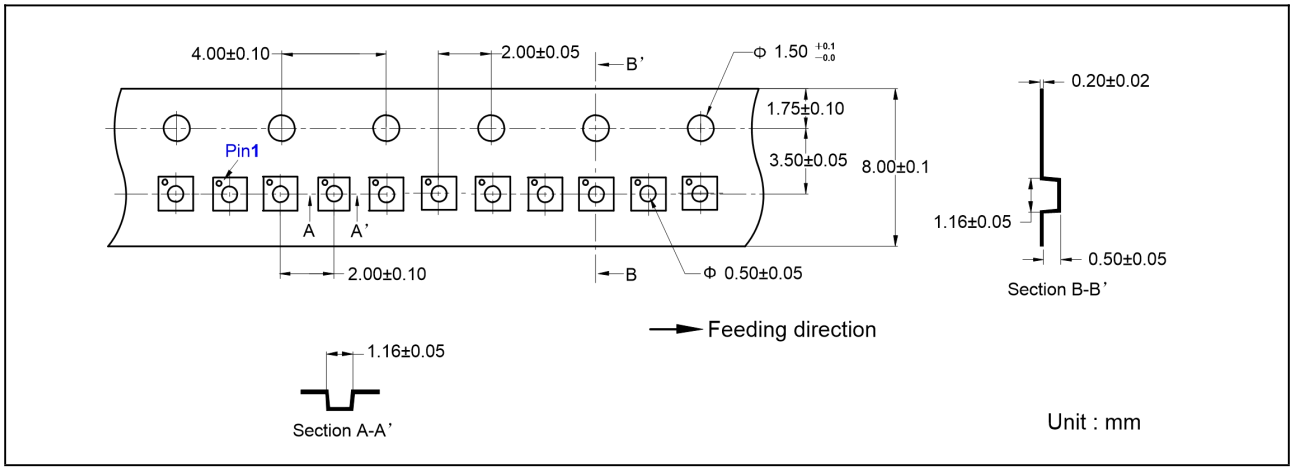

SOT23-5 (1.6mm × 2.9mm)

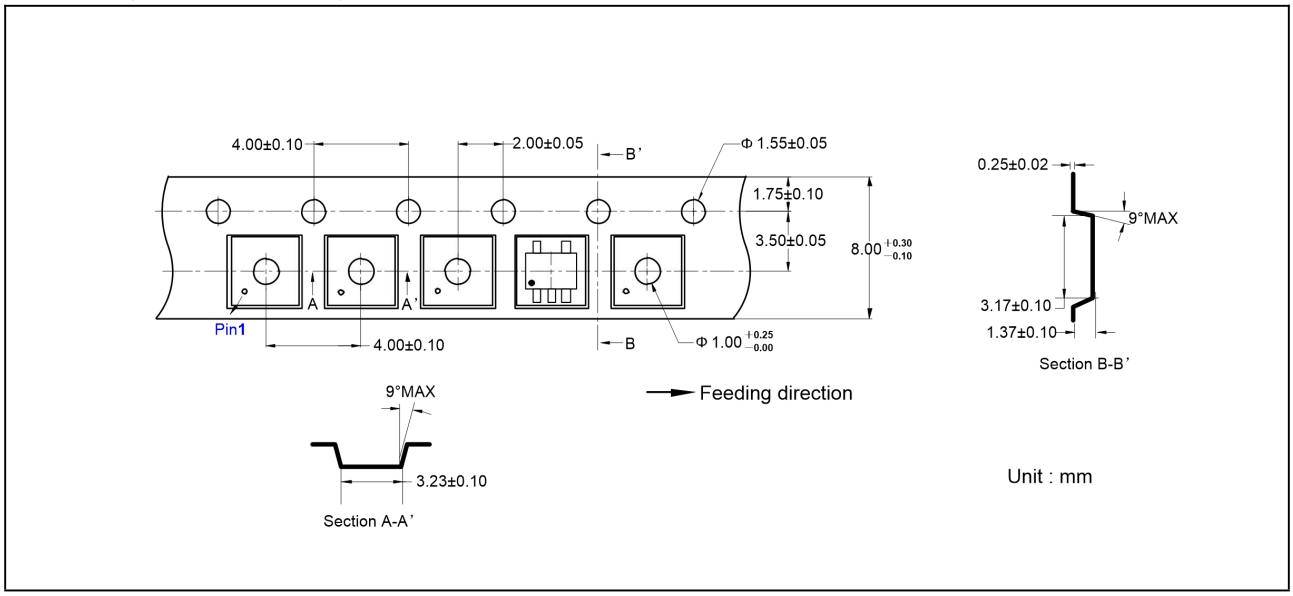

Marking

DFN4 Package	SOT23-5 Package	WLCSP4 Package
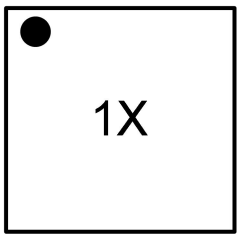	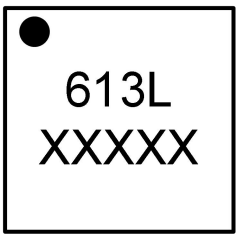	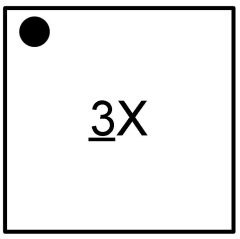
1 = Part Number X = Tracking Number	613L = Part Number XXXXX = Tracking Number	3 = Part Number X = Tracking Number

Revision History and Checking Table

Version	Date	Revision Item	Modifier	Function & Spec Checking	Package & Tape Checking
0.0	2026-06-05	Preliminary Version	Lu shaojie	Yang xiaoxu	Liu jiaying
1.0	2026-09-22	Official Version	Lu shaojie	Yang xiaoxu	Liu jiaying
1.1	2026-11-16	Add SOT23-5 Package	Zhang zixuan	Wang anran	Liu jiaying