Ultra Efficient Energy Harvester with Battery Management, Buck Converter and 5V Linear Charger

General Description

The ET9PW64 is specifically designed to extract DC energy harvesting, high-impedance sources like photovoltaic(solar) or thermal electric generators (TEGs) without collapsing those sources. 5V input Linear Charger can also be used to charge the battery (e.g. if the battery gets depleted). This fully integrated and compact power management system allows for extending battery lifetime and eliminating the primary energy storage in a large range of applications.

The ET9PW64 has a built-in cold-start circuit, it can start operating with an input voltage as low as 275mV (min.2μW power), it makes ET9PW64 to better harvest the energy from those energy harvesting.

There is a boost from the energy harvesting to the battery. The boost can implements voltage regulation of the energy harvesting, allowing for harvesting the maximum efficiency energy harvesting from the source to the battery.

There is a buck regulator with selectable output voltage from the battery which allows an application circuit to be supplied with high efficiency.

ET9PW64 has abundant analog and digital configurable resources to meet the requirements of various customized functions.

ET9PW64 can work in shipping mode which can avoid charging and discharging of the storage element during shipping or storage.

Features

- Cold Start from 275mV / 2μW Input
  - Startup at Ultra-low Power from Harvesting Source Input
- Selectable Input Regulation Voltage of Boost for Energy Harvesting
  - Up to 110mA Current Extracted from the Harvester
- Selectable Overdischarge and Overcharge Protection
  - Supports Various Types of Rechargeable Batteries (LiC, Li-ion, LiPo...)
- Selectable Output of Buck for Application Circuit
  - Buck with Efficiency above 90%
  - Output Current up to 120mA
- System Configuration by GPIO
- Shipping Mode with less than 10nA Leakage Current of Battery

- 5V Linear Charger
  - Provide a way for Fast Charging with Pre-Charge/CC/CV Charge Mode when no Source is Available for Long Time
- Package Information:

Part No.	Package	MSL
ET9PW64	QFN24 (4mm×4mm)	Level 1

Application

- Remote Control
- Portable Device
- Wearable Device
- Wireless Keyboards

Pin Configuration

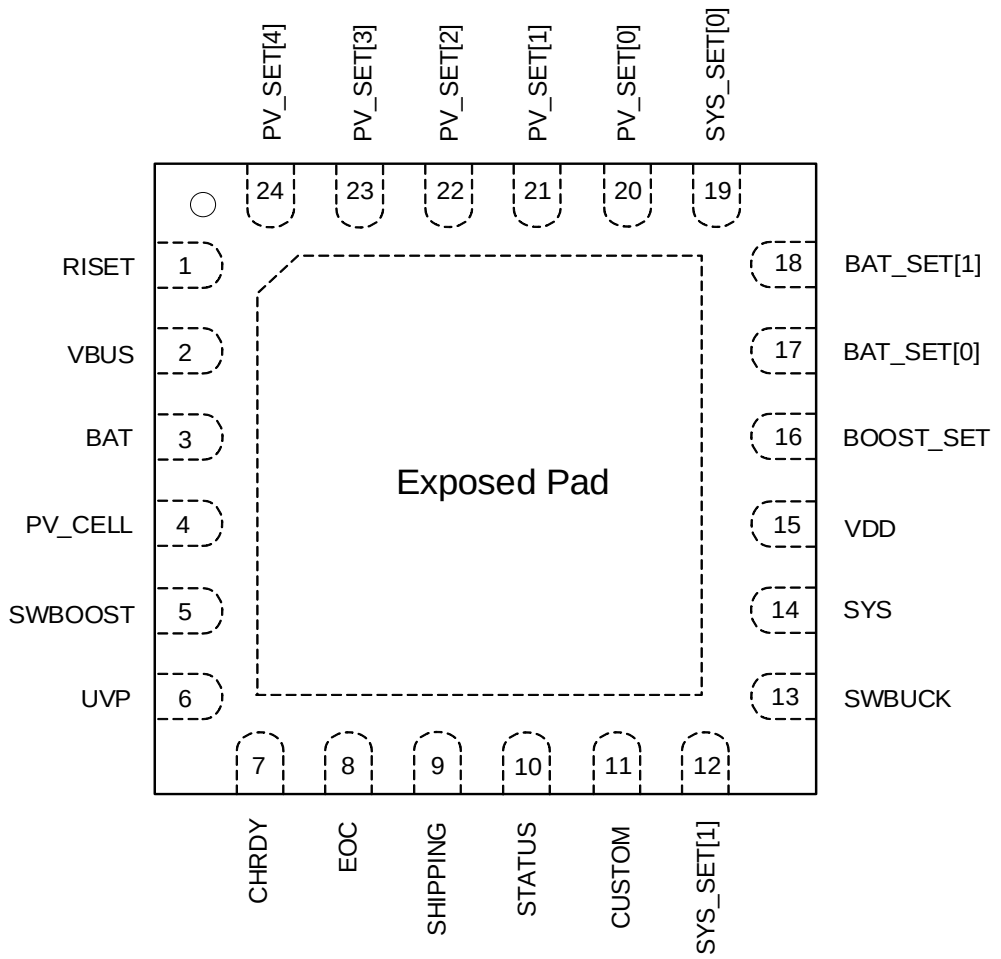

Top View

Pin Function

Pin No.	Pin Name	Description
Power pins		
2	VBUS	DC Power Supply Input(optional).Leave floating if not used.
3	BAT	Connection to the energy storage element (rechargeable battery).
4	PV_CELL	Connection to the PV cell energy source harvested.
5	SWBOOST	Switch node connection of the boost converter.
13	SWBUCK	Switch node connection of the buck converter.
14	SYS	Output voltage of the buck converter to supply system circuit.
15	VDD	Connection for C_{VDD} buffering capacitor. Internal power supply (do not connect any external circuit on VDD).

Pin Function(Continued)

Pin No.	Pin Name	Logic Level		Description
		LOW	HIGH	
Control pins				
9	SHIPPING	GND	BAT	Logic input. When HIGH: ● Minimum consumption from the storage element. ● Boost converter is disabled ● Buck is disabled. ● VDD is charged only when energy is available on PV_CELL. Read as LOW if left floating.
Configuration pins				
12	SYS_SET[1]	GND	VDD	Used to configure the SYS output regulation voltage. Read as HIGH if left floating.
19	SYS_SET[0]	GND	VDD	
18	BAT_SET[1]	GND	VDD	Used to configure the battery storage element voltage thresholds. Read as HIGH if left floating.
17	BAT_SET[0]	GND	VDD	
24	PV_SET[4]	GND	VDD	Used for the configuration of PV_CELL regulation voltage. Read as HIGH when left floating.
23	PV_SET[3]	GND	VDD	
22	PV_SET[2]	GND	VDD	
21	PV_SET[1]	GND	VDD	
20	PV_SET[0]	GND	VDD	
16	BOOST_SET	GND	VDD	Used to configure the boost converter turn on timings.
1	RISET	Analog Pin		Connection to an external resistor to set the charging current from VBUS supply to BAT. Leave floating if the VBUS power supply is not used.
6	UVP	Analog Pin		Used for the configuration of the threshold voltages for the energy storage element when in customize mode (optional). If customize mode is not used: ● Connect CUSTOM to GND. ● UVP /CHRDY / EOC Leave floating.
7	CHRDY			
8	EOC			
11	CUSTOM			

Pin Function(Continued)

Pin No.	Pin Name	Logic Level		Description
		LOW	HIGH	
Status pins				
10	STATUS	GND	BAT	Logic output: ● LOW when in SHIP MODE and RESET MODE and VBAT<$V_{BAT_UVP_F}$. ● HIGH otherwise.
Other pins				
Thermal PAD	GND			The thermal pad must be strongly tied to the PCB ground plane, as it is the main GND connection of the ET9PW64.

Simplified schematic

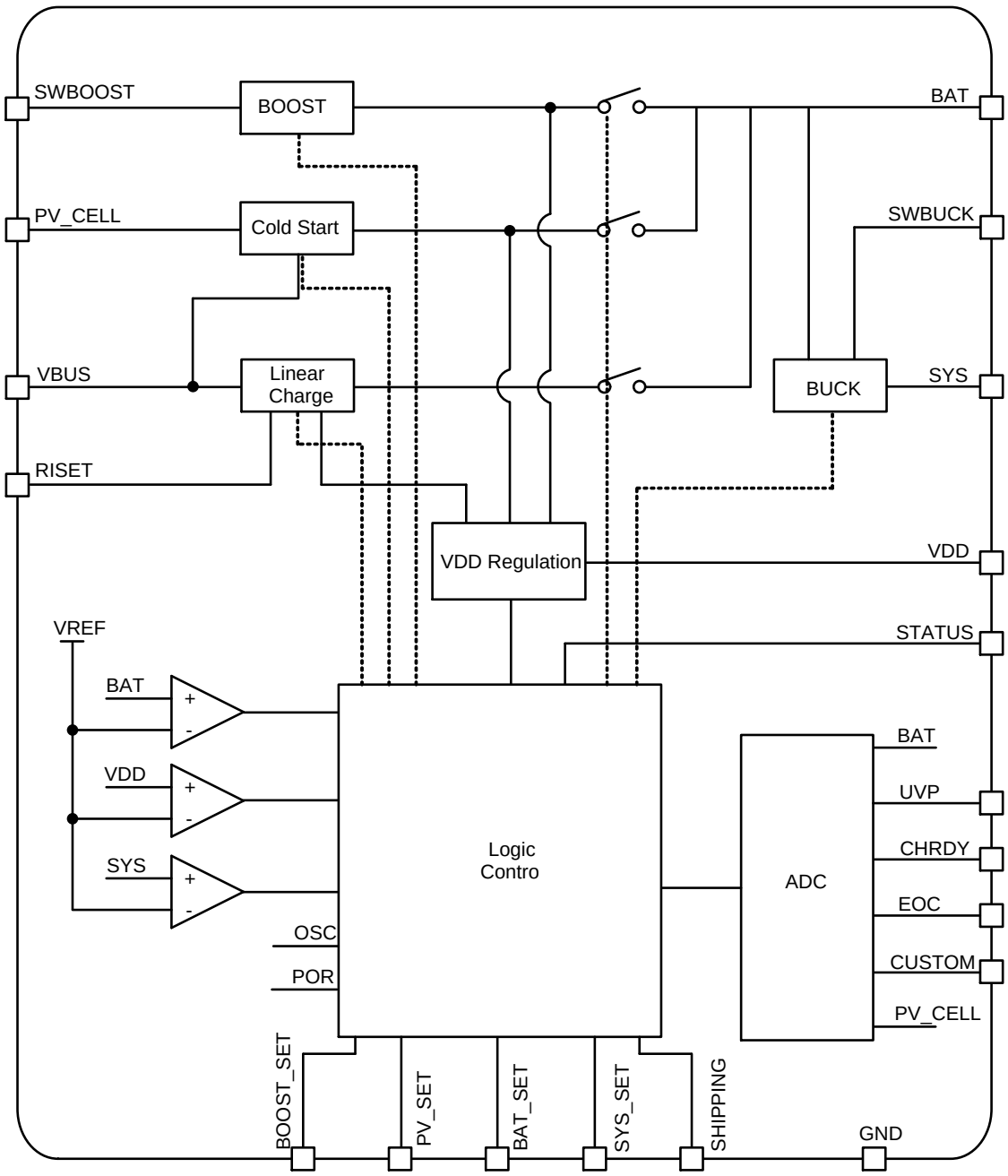

Figure 1. Simplified inside schematic

Absolute Maximum Ratings

Symbol	Parameter	Min	Typ	Max	Unit
V_{IN}	VDD, PV_SET[x], SYS_SET[x], BAT_SET[x], BOOST_SET Pins DC Voltage	-0.3		4.5	V
V_S	Other pins DC Voltage	-0.3		6	V
T_J	Operating junction temperature	-40		150	°C
T_{STG}	Storage Temperature	-65		150	°C
V_{ESD}	Electrostatic Discharge Capability(HBM)			2000	V
	Electrostatic Discharge Capability(CDM)			500	V

Maximum ratings are those values beyond which device damage can occur. Maximum ratings applied to the device are individual stress limit values (not normal operating conditions) and are not valid simultaneously. If these limits are exceeded, device functional operation is not implied, damage may occur and reliability may be affected.

Note. This device series incorporates ESD protection and is tested by the following methods:

ESD Human Body Model tested per ESDA/JEDEC JS-001-2017.

CDM tested per ESDA/JEDEC JS-002-2018.

Recommended Operating Conditions

Symbol	Parameter		Min	Typ	Max	Unit
Recommended Operating Temperature Range						
T_A	Operating Temperature Range		-40		85	°C
External components						
C_{PV_CELL}	Capacitor decoupling of PV_CELL terminal		10	22		µF
C_{SYS}	Capacitor decoupling of buck converter		10	22		µF
C_{VDD}	Capacitor decoupling of VDD terminal		4.7	10		µF
C_{BAT}	Capacitor decoupling of BAT terminal		10	47		µF
C_{VBUS}	Capacitor decoupling of VBUS terminal		1	3.3		µF
L_{BOOST}	Inductor of boost converter(BOOST_SET = L)		3.3	10		µH
	Inductor of boost converter(BOOST_SET = H)		10	33		µH
L_{BUCK}	Inductor of buck converter		3.3	10		µH
R_{RISET}	Resistor for configuring the 5V charger current when in constant current mode (CC).		0.33		5	kΩ
R_T	Optional - Resistor for setting threshold voltage of the battery in custom mode		0.1		0.4	MΩ
Logic input pins						
PV_CELL _SET[4:0]	Boost source voltage regulation settings	Logic LOW (0)	Connect to GND			
		Logic HIGH (1)	Connect to VDD			
BAT_SET[1:0]	Storage element voltage thresholds configuration	Logic LOW (0)	Connect to GND			
		Logic HIGH (1)	Connect to VDD			
SYS_SET[1:0]	SYS buck output voltage regulation Configuration	Logic LOW (0)	Connect to GND			
		Logic HIGH (1)	Connect to VDD			
BOOST_SET	Configure the boost converter turn on timings	Logic LOW (0)	Connect to GND			
		Logic HIGH (1)	Connect to VDD			
SHIP_MODE	Shipping mode enable	Logic LOW (0)	Connect to GND			
		Logic HIGH (1)	Connect to BAT			

Electrical Characteristics

T_A = 25°C, unless otherwise noted.

Symbol	Parameter	Test Conditions	Min	Typ	Max	Unit
Input voltage and input power						
$P_{PV_CELL,CS}$	Minimum source power required for cold start			2		μW
$V_{PV_CELL,CS}$	Minimum source voltage required for cold start			0.275		V
$V_{PV_CELL,REG}$	Target regulation voltage of the source, depending on PV_SET[4:0] configuration		0.25		3.20 (1)	V
V_{VBUS}	Voltage on the VBUS pin to allow for Linear Charging		3.6 (2)		5.5	V
I_{SET}	Maximum charging current of Linear Charger when in constant current mode. This is programmed by the resistor on the RISET pin.		10		150	mA
Time parameter						
t_{DEB}	Debounce Time from $V_{BAT} < V_{BAT_UVP_F}$ to buck SYS turn off			2.50		s
t_{GPIO}	GPIO reading time interval			1.85		s
BAT Storage element						
V_{BAT}	Voltage on the storage element		2.4 (3)		4.5 (3)	V
$V_{BAT_UVP_F}$	Minimum voltage accepted on BAT before stopping to supply SYS	BAT_SET[1:0] =00		2.46		V
		BAT_SET[1:0] =01/10		3.00		V
		BAT_SET[1:0] =11		3.50		V
$V_{BAT_UVP_R}$	Voltage required on BAT to start supplying to SYS	BAT_SET[1:0] =00		2.56		V
		BAT_SET[1:0] =01/10		3.20		V
		BAT_SET[1:0] =11		3.55		V
V_{BAT_REG}	Maximum voltage accepted on BAT before disabling its charging	BAT_SET[1:0] =00		3.80		V
		BAT_SET[1:0] =01		4.12		V
		BAT_SET[1:0] =10		4.35		V
		BAT_SET[1:0] =11		3.90		V
SYS output voltage						
V_{SYS}	SYS output voltage	SYS_SET[1:0] =01		2.2		V
		SYS_SET[1:0] =10		2.5		V
		SYS_SET[1:0] =11		2.8		V
Internal supply & quiescent current						
V_{VDD}	Internal voltage supply			1.8		V
$V_{VDD,RESET}$	Minimum voltage on VDD of internal circuit operation normal			1.6		V
$V_{VDD,START}$	Minimum voltage on VDD of internal circuit startup when first power-on			1.85		V

Electrical Characteristics(Continued)

T_A = 25°C, unless otherwise noted.

Symbol	Parameter	Test Conditions	Min	Typ	Max	Unit
I_{BAT1}	Quiescent current on BAT in discharge Mode	SYS disabled		380		nA
		SYS enabled		580		nA
I_{BAT2}	Quiescent current on BAT when charge done	SYS disabled		280		nA
		SYS enabled		480		nA
I_{SHIP}	Quiescent current on BAT when in shipping mode			10		nA

Note1.To harvest energy from the source, the open-circuit voltage of the PV_CELL energy source V_{OC} need higher than $V_{PV_CELL,REG}$.

Note2.In order for 5V Linear Charger operate, VBUS voltage must be above 3.6 V and $V_{VBUS} \geq V_{BAT}$+200mV.

Note3. Set $V_{BAT_UVP_F}$ and V_{BAT_REG} value range of custom mode.

.

Functional Description

Overview

ET9PW64 has two regulated switching converters, the boost converter and the buck converter with high-power conversion efficiency. At first start-up, as soon as a required cold start voltage of 275mV and a scant amount of power of just 2μW available from the harvested energy source, then ET9PW64 cold starts.

After the cold start, the Boost starts, it will extract energy from the energy harvesting to Battery. The boost can implements voltage regulation of the energy harvesting, allowing for harvesting the maximum efficiency energy harvesting from the source to the Battery. The regulation voltage of PV_CELL can be setting by PV_SET[4:0].

When the battery voltage(V_{BAT}) higher than $V_{BAT_UVP_R}$, the buck converter starts up, it will supply power to the application system, and the output voltage of buck can be set by SYS_SET[1:0].

A build-in 5V Linear Charger provides a way for fast charging with Pre-Charge/CC/CV Charge Mode when no source is available for a long time, and the charge parameters can be set by BAT_SET[1:0], the charge current is set by an external resistor of RISET pin.

Cold-Start

The ET9PW64 can cold start from PV_CELL or VBUS. The cold start circuits supply to ET9PW64 internal circuit (connected to VDD) when V_{BAT} below $V_{BAT_UVP_F}$. VDD is supplied by BAT when V_{BAT} high than $V_{BAT_UVP_F}$.

Boost Converter

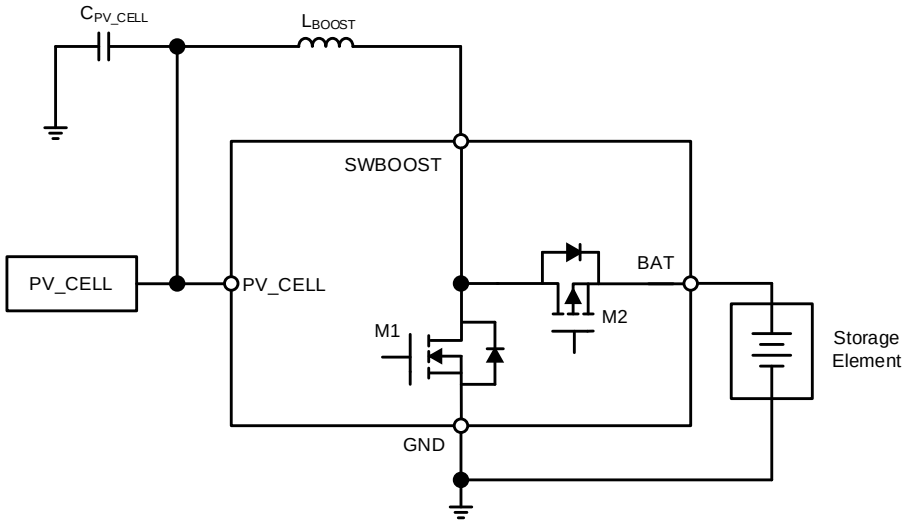

Figure 2. Simplified Schematic of boost converter

The boost converter can extract the energy from energy harvester to charge the battery, in the range of 1.5V to 4.5V which can be set by BAT_SET[1:0] or customized by external resistor in custom mode.

The boost can regulate the voltage of the energy harvester to prevent the power collapse, and the voltage is set by PV_SET[4:0]. An external inductor L_{BOOST} and a capacitor C_{PV_CELL} are needed. The recommended value of the L_{BOOST} is 33μH when BOOST_SET = 1. The recommended value of the capacitor C_{PV_CELL} is 22μF

which prevent the regulation voltage from the current pulses induced by the boost converter.

The inductor peak current depends on the value of L_{BOOST} and on the BOOST_SET settings.

The Boost does not work under the following conditions:

- If the open-circuit voltage of the energy harvester is lower than $V_{PV_CELL,REG}$, the boost does not work.
- If battery voltage higher than V_{BAT_REG}, the boost does not work.

The BOOST_SET pin allows for modifying the peak current of the boost inductor by multiplying the on/off timings of the boost converter, as shown in Table 1. The higher the timing multiplier, the higher the boost inductor peak current, and thus the higher the average source current pulled from PV_CELL to BAT.

The peak current in the inductor also depends on the value of the inductor. Table 1 shows the minimum inductor value to be implemented for each timing value.

Table 1. Boost converter timings configuration

Configuration pin	Function	
BOOST_SET	Timing multiplication factor	Minimum L_{BOOST} inductance (μH)
0	x1	3.3
1	x3	10

Linear Charger

The ET9PW64 has a 5V Linear Charger for fast charging of the battery with Pre-Charge/CC/CV Charge Mode. When the VBUS voltage higher than 3.6V and the BAT voltage less than V_{BAT_REG}, higher than $V_{BAT_UVP_R}$, the Linear Charger starts charging the battery with CC mode; If the the BAT voltage less than $V_{BAT_UVP_R}$, the Linear Charger starts charging the battery with Pre_Charge mode. When the BAT voltage is close to V_{BAT_REG}, the Linear Charger starts charging the battery with CV mode, at that time the charging current gradually decrease to zero as the V_{BAT} reaches V_{BAT_REG}.

The 5V Charger implements CC/CV operation. When in CC, the maximum charging current I_{SET} can be set by connecting a resistor R_{RISET} between RISET pin and GND:

$$I_{SET}=50/R_{RISET}$$

Please note that R_{RISET} must be chosen so that I_{SET} complies to the range. Example values can be found in Table 2:

Table 2. Typical resistor values for setting 5 V charger max.current

Resistor(Ω)	Maximum Charging Current(mA)
R_{RISET}	I_{SET}
5000	10
2000	25
680	73.5
330	150

Buck Converter

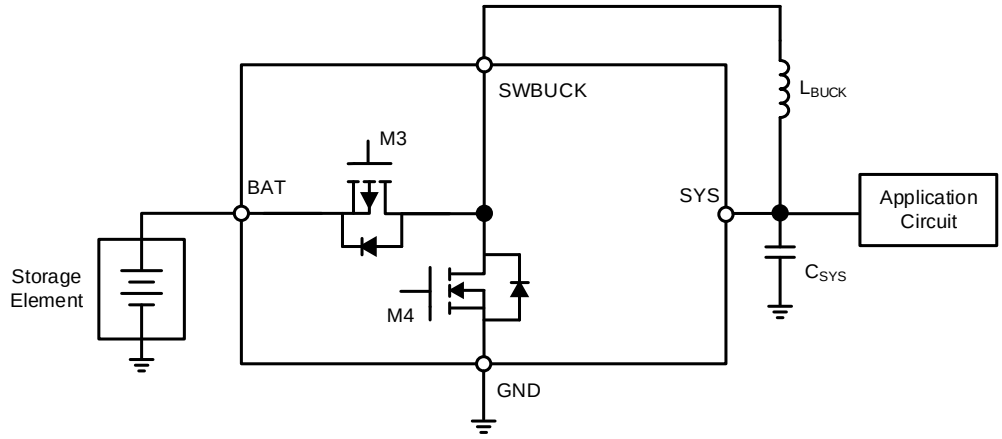

Figure 3. Simplified Schematic of buck converter

ET9PW64 provides a buck converter to extract energy from the battery to the regulated SYS output. The SYS regulation voltage V_{SYS} is set by SYS_SET[1:0].

An external inductor L_{BUCK} and a capacitor C_{SYS} are needed. The recommended value of the L_{BUCK} is 10μH. The recommended value of the capacitor C_{SYS} is 22μF which prevent the regulation voltage from the current pulses induced by the buck converter.

Setting the SYS regulation voltage V_{SYS} is done through SYS_SET[1:0] pins.

After cold start, if the battery voltage is higher than $V_{BAT_UVP_R}$, the buck starts to work and supply the SYS output until the battery voltage drops below $V_{BAT_UVP_F}$ longer than t_{DEB}.

The buck will switch to “Hysteresis Control” mode under the following conditions:

- V_{BAT} - V_{SYS} < 0.25V.
- When V_{SYS} is too low because of load current, the “Hysteresis Control” mode enabled, making V_{SYS} rise.

Table 3 shows how to configure the regulated voltage on SYS output with the SYS_SET[1:0] pins

Table 3. Configuration of SYS voltage with SYS_SET[1:0] pins

Configuration pins		SYS voltage(V)
SYS_SET[1:0]		V_{SYS}
0	0	OFF
0	1	2.2
1	0	2.5
1	1	2.8

The buck output voltage cannot be selected higher than $V_{BAT_UVP_F}$. As in such situation, ET9PW64 will not start the buck converter.

State Machine Description

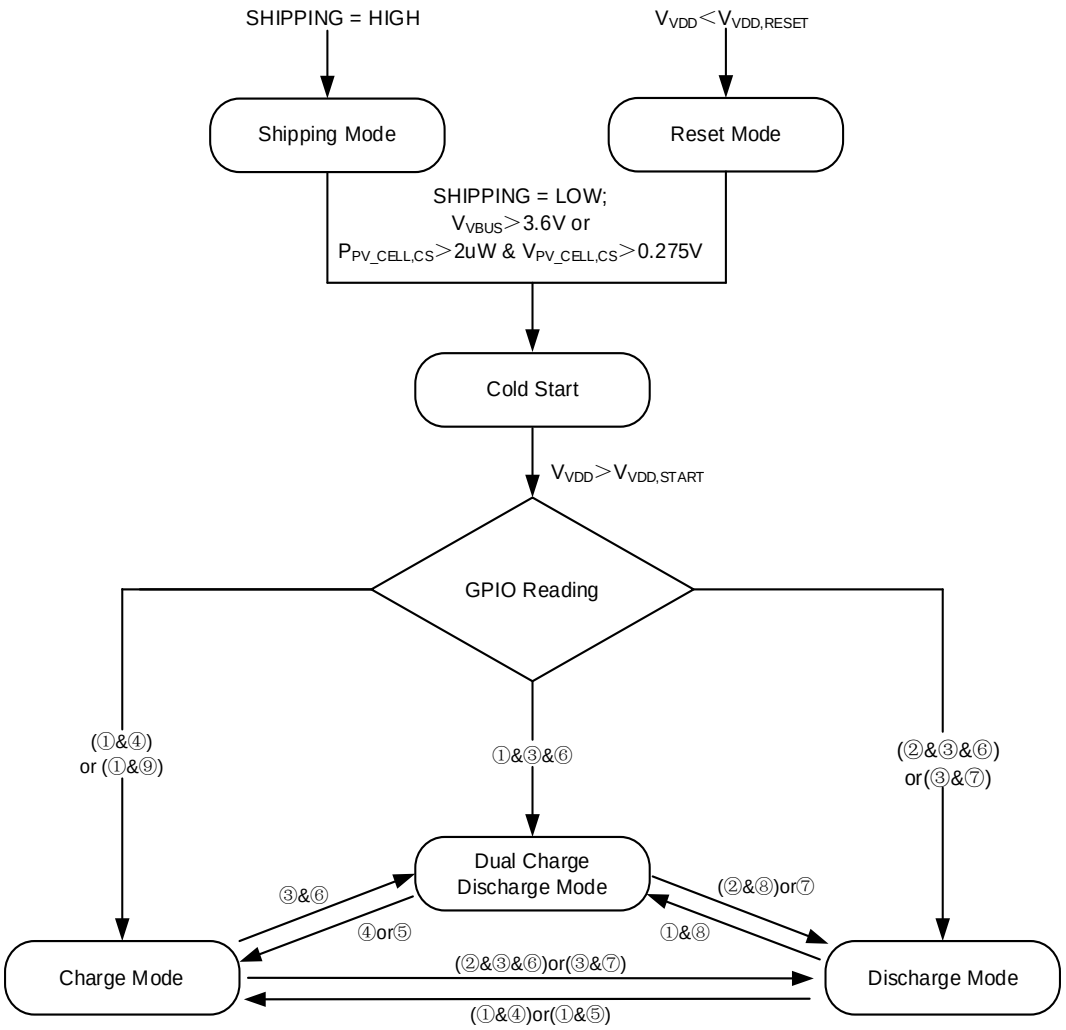

Figure 4. State Machine

① VBUS or PV CELL is on；
② No VBUS and no PV CELL；
③ SYS_SET[1:0]=01/10/11；
④ SYS_SET[1:0]=00；
⑤ V_{BAT} < $V_{BAT_UVP_F}$；
⑥ $V_{BAT_UVP_R}$ < V_{BAT} < V_{BAT_REG}；
⑦ V_{BAT} > V_{BAT_REG}；
⑧ $V_{BAT_UVP_F}$ < V_{BAT} < V_{BAT_REG}；
⑨ V_{BAT} < $V_{BAT_UVP_R}$；

➢ Reset Mode

The ET9PW64 enters Reset Mode under the following conditions:

- V_{DD} < 1.6V($V_{DD,RESET}$).
- Shipping mode is enabled (SHIPPING pin is HIGH).

In RESET STATE, the ET9PW64 works as follows:

- The cold start circuit of ET9PW64 starts to make V_{DD} rise to 1.85V when V_{PV_CELL} > 0.275V and $P_{PV_CELL,CS}$ > 2μW or V_{BUS} > 3.6V
- The internal circuit supplied by VDD will be started.
- STATUS is LOW.

The ET9PW64 stays in RESET STATE until the V_{DD} reach 1.85V. If V_{DD} < 1.6V, ET9PW64 will switch to RESET STATE again.

If shipping mode is enabled, both boost converter and buck converter are disabled, ET9PW64 stays in RESET STATE until shipping mode is disabled by setting SHIPPING LOW.

➢ **GPIO Reading**

During GPIO Reading, ET9PW64 will read the GPIO setting every time interval, and there is a build-in ADC to detect the voltage of the battery and the energy harvester, and compare with the internal reference voltage.

The ET9PW64 will enter into the next state based on the parameters obtained during GPIO reading.

➢ **Charge Mode**

During Charge Mode, the battery is charged by VBUS or energy harvester, and the SYS output is disabled.

The ET9PW64 will enter into Charge Mode under the following conditions:

- VBUS or PV CELL is on.
- V_{BAT} < $V_{BAT_UVP_R}$ or SYS_SET[1:0]=00.

➢ **Discharge Mode**

During Discharge Mode, the charge current from VBUS or energy harvester is off, and the SYS output is enabled.

The ET9PW64 will enter into Discharge Mode under the following conditions:

- V_{BAT} > V_{BAT_REG} or (no VBUS and no PV CELL).
- V_{BAT} > $V_{BAT_UVP_R}$ and SYS_SET[1:0]=01/10/11.

➢ **Dual Charge-Discharge Mode**

During Dual Charge-Discharge Mode, the battery is charged by VBUS or energy harvester, and the SYS output is enabled.

The ET9PW64 will enter into Dual Charge-Discharge mode under the following conditions:

- $V_{BAT_UVP_R}$ < V_{BAT} < V_{BAT_REG} and (VBUS or PV CELL is on).
- SYS_SET[1:0]=01/10/11.

➢ **STATUS PIN**

STATUS pin is push-pull output , it's logic output is:

- LOW when in SHIP MODE and RESET MODE and VBAT < $V_{BAT_UVP_F}$.
- HIGH otherwise.

GPIO SETTING

Configuration Pins Reading

After a cold start, the ET9PW64 reads the configuration pins every time interval which is t_{GPIO}. The configuration pins can be changed on-the-fly. The floating configuration pins are read as HIGH, except SHIP_MODE which is read as LOW.

PV_CELL Voltage Regulation SETTING

User can set the regulation voltage with PV_SET[4:0] (see Table 4).

Table 4. Configuration of PV_CELL constant regulation voltage with PV_SET[4:0] pins

Configuration pins					Voltage(V)	Configuration pins					Voltage(V)
PV_SET[4:0]					$V_{PV_CELL,REG}$	PV_SET[4:0]					$V_{PV_CELL,REG}$
0	0	0	0	0	0.25	1	0	0	0	0	1.10
0	0	0	0	1	0.30	1	0	0	0	1	1.20
0	0	0	1	0	0.35	1	0	0	1	0	1.30
0	0	0	1	1	0.40	1	0	0	1	1	1.40
0	0	1	0	0	0.45	1	0	1	0	0	1.50
0	0	1	0	1	0.50	1	0	1	0	1	1.60
0	0	1	1	0	0.55	1	0	1	1	0	1.70
0	0	1	1	1	0.60	1	0	1	1	1	1.80
0	1	0	0	0	0.65	1	1	0	0	0	1.90
0	1	0	0	1	0.70	1	1	0	0	1	2.00
0	1	0	1	0	0.75	1	1	0	1	0	2.20
0	1	0	1	1	0.80	1	1	0	1	1	2.40
0	1	1	0	0	0.85	1	1	1	0	0	2.60
0	1	1	0	1	0.90	1	1	1	0	1	2.80
0	1	1	1	0	0.95	1	1	1	1	0	3.00
0	1	1	1	1	1.00	1	1	1	1	1	3.20

Storage Element Thresholds SETTING

Two methods are available to configure the storage element voltage thresholds $V_{BAT_UVP_F}$, $V_{BAT_UVP_R}$ and V_{BAT_REG}.

- Configuration through the BAT_SET[1:0] pins.
- Configuration using the custom mode.

➢ **GPIO Configuration Pins**

The storage element protection thresholds $V_{BAT_UVP_F}$, $V_{BAT_UVP_R}$ and V_{BAT_REG}, can be configured through the BAT_SET[1:0] pins as shown in Table 5.

Table 5. Storage element configuration with BAT_SET[1:0] pins

Configuration pins		Overdischarge voltage (V)	Charge ready voltage (V)	Overcharge voltage (V)	Pre-Charge/CC Ratio
BAT_SET[1:0]		$V_{BAT_UVP_F}$	$V_{BAT_UVP_R}$	V_{BAT_REG} (4)	
0	0	2.46	2.56	3.80	30%
0	1	3.00	3.20	4.12	10%
1	0	3.00	3.20	4.35	10%
1	1	3.50	3.55	3.90	10%

Note4. Above V_{BAT_REG} is for PV_CELL harvester charge;

If use Linear Charger, it will be V_{BAT_REG} -60mV to protect storage element.

If set BAT_SET[1:0] = 00,SYS voltage 2.8V setting is invalid,and 2.2V/2.5V setting are available.

➢ **Custom mode**

When CUSTOM is not connected to GND, the custom mode is selected regardless of BAT_SET[1:0] pins and all four configuration resistors shown in Figure 5, must be wired as follows:

$V_{BAT_UVP_F}$, $V_{BAT_UVP_R}$ and V_{BAT_REG} are defined thanks to R1, R2, R3 and R4. Defining RT as follows, R1, R2, R3 and R4 are calculated as:

- RT=R1+R2+R3+R4
- 100kΩ ≤ RT ≤ 400kΩ
- $R1=RT*(0.5V/V_{BAT_REG})$
- $R2=RT*(0.5V/V_{BAT_UVP_R} – 0.5V/V_{BAT_REG})$
- $R3=RT*(0.5V/V_{BAT_UVP_F} – 0.5V/V_{BAT_UVP_R})$
- R4=RT-(R1+R2+R3)

The following constraints must be met to ensure the functionality of the chip:

- $2.40V < V_{BAT_UVP_F} < 3.58V$
- $2.4V < V_{BAT_UVP_R} < 3.64V$
- $2.70V < V_{BAT_REG} < 4.5V$
- $V_{BAT_UVP_R}$ +0.05V < V_{BAT_REG} < 4.5V
- $V_{BAT_UVP_F}$ + 0.05V < $V_{BAT_UVP_R}$ < V_{BAT_REG} -0.05V
- $V_{SYS} < V_{BAT_UVP_F}$

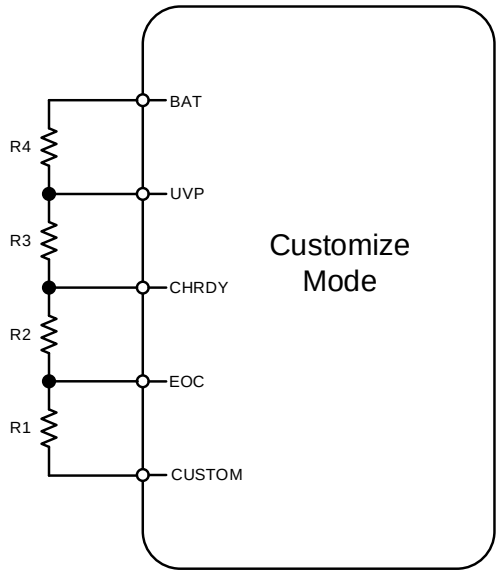

Figure 5. Custom configuration resistors

Typical Application Circuits

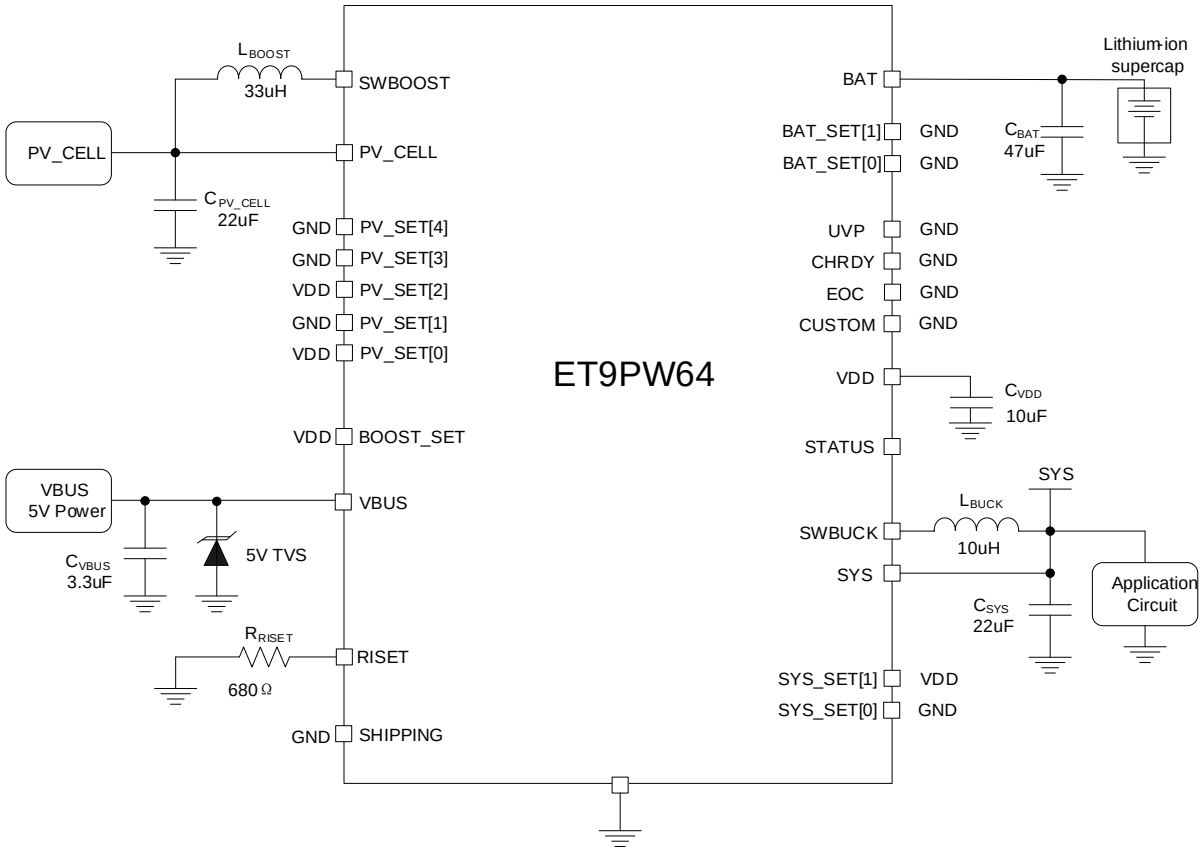

Figure 6. Typical application circuit

Configuration of PV_CELL

PV_CELL harvester has a constant 0.5V MPPT voltage. PV_CELL is thus configured as follows:

- PV_SET[4:0] = 00101(PV_CELL 0.5V regulation)
- BOOST_SET = 1 (x3 boost timing)
- L_{BOOST} = 33μH for best efficiency with x3 boost timing

Configuration of BAT

The storage element is a Lithium-ion super-capacitor, so storage element threshold voltages are set as follows:

- BAT_SET[1:0] = 00
- $V_{BAT_UVP_F}$ = 2.46V
- $V_{BAT_UVP_R}$ = 2.56V
- V_{BAT_REG} = 3.8V
- Custom mode is not used, so CUSTOM, UVP, CHRDY and EOC are connected to GND.

Configuration of SYS

The application circuit is supplied with 2.5V SYS voltage. The buck converter is configured as follows:

- SYS_SET[1:0] = 10 (2.5V SYS voltage)
- L_{BUCK} = 10μH for high current capability

Configuration of Linear Charger

Series resistor is 680Ω, which leads to a 73.5mA maximum current.

- R_{RISET} = 680Ω
- I_{SET} = 73.5mA

Configuration of Shipping mode

Shipping mode is not used.

- SHIPPING is connected to GND.

Typical Operating Characteristics

BOOST conversion efficiency (L_{BOOT}=33μH and BOOST_SET = 1):

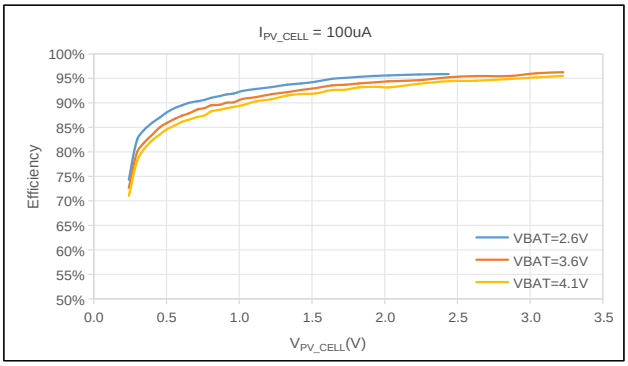

Figure 7. BOOST conversion efficiency (I_{PV_CELL}=100μA)

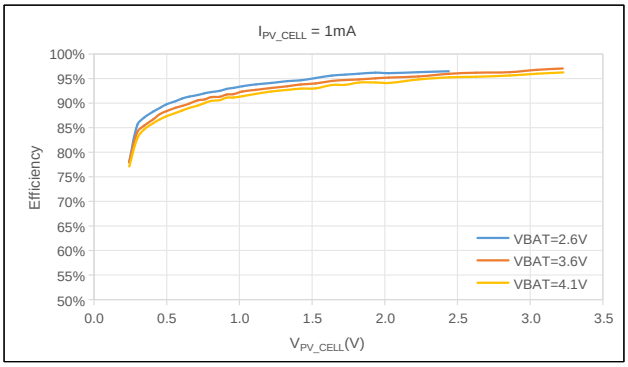

Figure 8. BOOST conversion efficiency (I_{PV_CELL}=1mA)

BUCK conversion efficiency (L_{BUCK}=10μH):

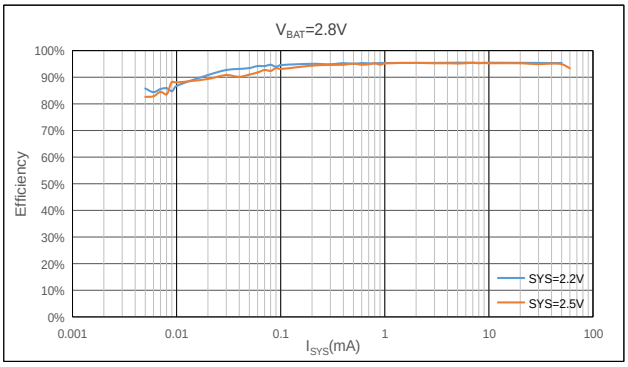

Figure 9. BUCK conversion efficiency (V_{BAT}=2.8V)

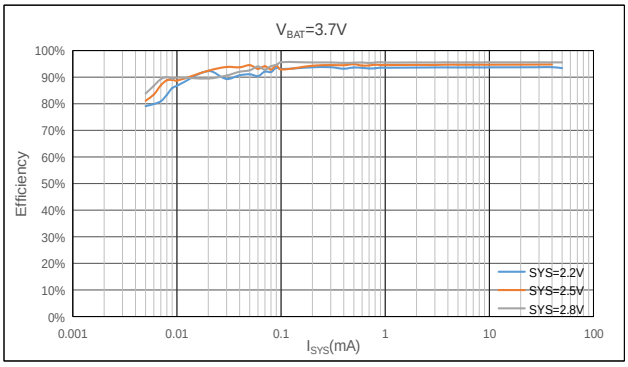

Figure 10. BUCK conversion efficiency (V_{BAT}=3.7V)

Package Dimension

QFN24(4*4)

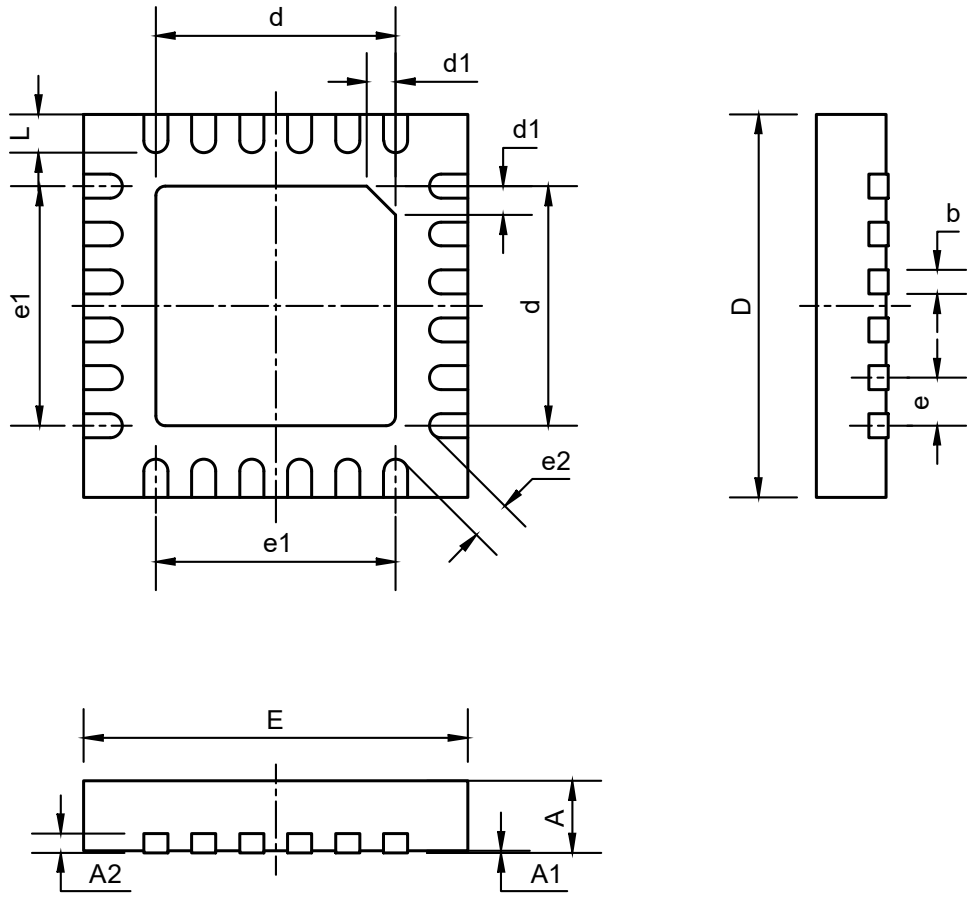

COMMON DIMENSIONS
(UNITS OF MEASURE=MILLIMETER)

SYMBOL	MIN	NOM	MAX
A	0.70	0.75	0.80
A1	0.00	0.02	0.05
A2	0.18	0.20	0.25
b	0.18	0.24	0.30
D	3.90	4.00	4.10
d	2.40	2.60	2.80
d1	0.30	0.35	0.40
E	3.90	4.00	4.10
e	0.50 BSC		
e1	2.30	2.50	2.70
e2	0.40	0.45	0.50
L	0.35	0.40	0.45

Tape Information

QFN24 (4*4)

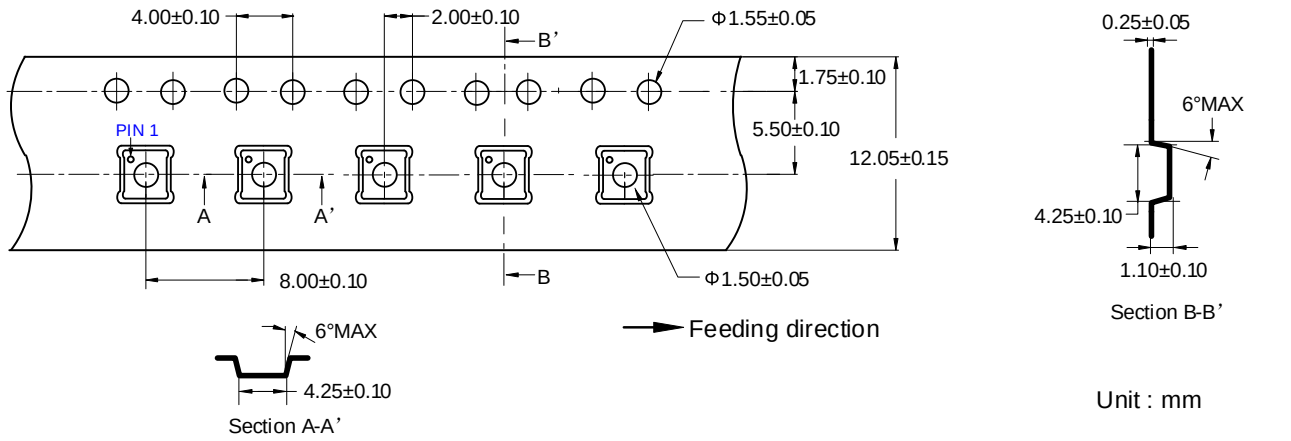

Marking Information

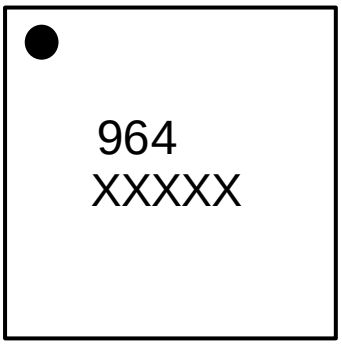

964 – Part Number

XXXXX – Tracking Number

Note：X (Tracking Number) is variable, according to the wafer lot number.

Revision History and Checking Table

Version	Date	Revision Item	Modifier	Function & Spec Checking	Package & Tape Checking
1.0	2026-03-23	Original Version	Chen Zu Xiong	Xia Yong Jie	Liu Jia Ying