Single Inverter with Open Drain Output

General Description

The ET74AHC1G06 is a high-performance single inverter with open drain outputs operating from a 2V to 5.5V supply. The Output stage is open drain with Over Voltage Tolerance. This allows the ET74AHC1G06 to be used to interface 5.0V circuits to circuits of any voltage between 0V and 7.0V.

Features

- Extremely High Speed: t_{pd} = 4.5ns (Typical) at V_{CC} = 5.0V
- Designed for 2V to 5.5V V_{CC} Operation, CMOS Compatible
- Over-voltage Tolerant Inputs Accept Voltages to 5.5V
- 8mA Output Sink Capability, Pull-up Between 0 and 7.0V
- Near Zero Static Supply Current Substantially Reduces System Power Requirements
- These Devices are Pb-Free, Halogen Free/BFR Free and RoHS Compliant in Configuration
- ESD Protection Complies with JESD22 Standard
  -- HBM: ±4000V Pass (JEDEC JS-001)
  -- CDM: ±1000V Pass (JEDEC JS-002)
- Latch-up Performance Exceeds ±100mA per JEDEC JESD78F
- Part No. and Package Information

Part No.	Package	Packing Option	MSL
ET74AHC1G06	SC70-5 (1.3mm × 2.1mm)	Tape and Reel, 3K/Reel	1
ET74AHC1G06T	SOT23-5 (1.6mm × 2.9mm)	Tape and Reel, 3K/Reel	3
ET74AHC1G06Y	DFN6 (1.0mm × 1.5mm)	Tape and Reel, 3K/Reel	1

Pin configuration

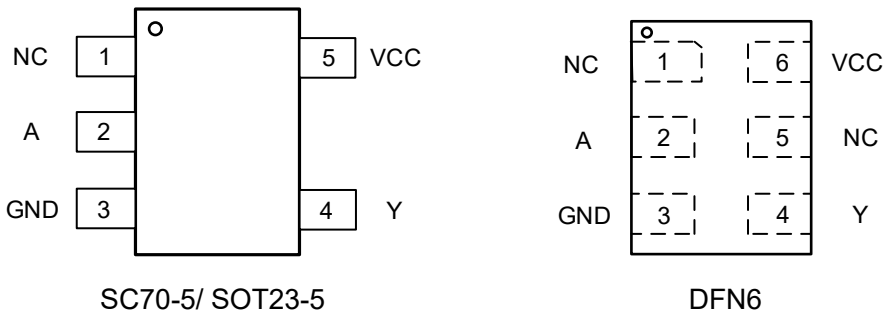

Figure1. Pin Configuration

Pin Function

SC70-5/ SOT23-5

Pin No.	Pin Name	Function
1	NC	No Connect
2	A	Input
3	GND	Ground
4	Y	Output
5	VCC	Supply Voltage

DFN6

Pin No.	Pin Name	Function
1	NC	No Connect
2	A	Input
3	GND	Ground
4	Y	Output
5	NC	No Connect
6	VCC	Supply Voltage

Block Diagram

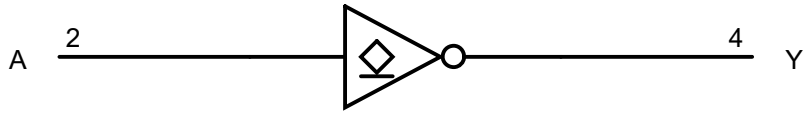

Figure2. Logic Symbol

Function Table

Input A	Output Y
L	Z
H	L

Absolute Maximum Ratings

Symbol	Parameter		Value	Unit
V_{CC}	DC Supply Voltage (VCC Pin)		-0.5 to 7.0	V
V_I	DC Input Voltage[1]		$-0.5 \le V_I \le 7.0$	V
V_O	DC Output Voltage Output in Higher or Low State		-0.5 to V_{CC} + 0.5	V
I_{IK}	DC Input Diode Current, V_I < GND		-50	mA
I_{OK}	DC Output Diode Current, V_O < GND, V_O > V_{CC}		±50	mA
I_O	DC Output Sink Current		±50	mA
I_{CC}	DC Supply Current Per Supply Pin		100	mA
I_{GND}	DC Ground Current Per Supply Pin		-100	mA
T_{STG}	Storage Temperature Range		-65 to 150	°C
T_L	Lead Temperature, Soldering 10 Seconds		260	°C
T_J	Max Junction Temperature		150	°C
V_{ESD}	ESD Classification	Human Body Model [2]	±4000	V
		Charged Device Model [3]	±1000	
I_{LU}	Max Latch Up Current Above V_{CC} and GND at 125°C [4]		±100	mA

Stresses exceeding those listed in this table may damage the device. If any of these limits are exceeded, device functionality should not be assumed, damage may occur and reliability may be affected.

Note1. I_O absolute maximum rating must be observed.

Note2: HBM tested per JEDEC JS-001;

Note3: CDM tested per JEDEC JS-002;

Note4: Latch Up Current Maximum Rating tested per JEDEC JESD78F.

Thermal Characteristics

Symbol	Package	Ratings	Value	Unit
$R_{\theta JA}$	SC70-5	Thermal Characteristics, Thermal Resistance, Junction-to-Air	300	°C/W
	SOT23-5		250	
	DFN6		440	
P_D	SC70-5	Power Dissipation in Still Air at 85°C	215	mW
	SOT23-5		260	
	DFN6		150	

Recommended Operating Conditions

Symbol	Parameter	Min	Max	Unit
V_{CC}	DC Supply Voltage	2	5.5	V
V_I	DC Input Voltage	0	V_{CC}	V
V_O	DC Output Voltage(High or Low State)	0	V_{CC}	V
T_A	Operating Temperature Range	-40	125	°C

Electrical Characteristics

DC Electrical Characteristics

(R_{PULL} = 1kΩ, Connect V_O to V_{CC})

Symbol	Parameter	Condition	V_{CC}(V)	T_A = 25°C			-40°C ≤ T_A ≤ 125°C		Unit
				Min	Typ	Max	Min	Max	
V_{IH}	High-Level Input Voltage		2.0	1.5			1.5		V
			3.0	2.1			2.1		
			5.5	3.85			3.85		
V_{IL}	Low-Level Input Voltage		2.0			0.5		0.5	V
			3.0			0.9		0.9	
			5.5			1.65		1.65	
V_{OL}	Low-Level Output Voltage	I_{OL} = 50uA	2~5.5			0.1		0.1	V
		I_{OL} = 4mA	3			0.36		0.55	
		I_{OL} = 8mA	4.5			0.36		0.55	
I_{IN}	Input Leakage Current	V_I = 5.5V or GND	0~5.5		0.1			2.0	uA
I_{OFF}	Power Off Leakage Current	V_I = 5.5V or V_O = 5.5V	0			1		10	uA
I_{CC}	Quiescent Supply Current	V_I = 5.5V or GND	5.5			1		40	uA

AC Electrical Characteristics

$t_r = t_f = 3ns$, $R_1 = R_L = 1k\Omega$;

Symbol	Parameter	Condition	V_{CC}(V)	T_A = 25 °C			-40°C ≤ T_A ≤ 125°C		Unit
				Min	Typ	Max	Min	Max	
t_{PLZ} t_{PZL}	Propagation Delay (Figure3 and 4)	C_L = 15pF	3~3.6		6	9.5	1	12	ns
		C_L = 50pF	3~3.6		8	14.5	1	17.5	
		C_L = 15pF	4.5~5.5		4.5	6.5	1	8	
		C_L = 50pF	4.5~5.5		6	8.5	1	10.5	

Capacitance Characteristics

Symbol	Parameter	Condition	Typ	Unit
C_{IN}	Input Capacitance	V_{CC} = 5.5V, V_I = 0V or V_{CC}	2.8	pF
C_{PD}	Power Dissipation Capacitance (5)	10MHz, V_{CC} = 3.3V, V_I = 0V or V_{CC}	2.5	pF
		10MHz, V_{CC} = 5.5V, V_I = 0V or V_{CC}	3.0	

Note5. C_{PD} is used to determine the dynamic power dissipation (P_D in μW).

$P_D = C_{PD} \times V_{CC}{}^2 \times f_i \times N + \Sigma(C_L \times V_{CC}{}^2 \times f_o)$ where:

f_i = input frequency in MHz;

f_o = output frequency in MHz;

C_L = output load capacitance in pF;

V_{CC} = supply voltage in V;

N = number of inputs switching;

$\Sigma(C_L \times V_{CC}{}^2 \times f_o)$ = sum of outputs.

AC Test Circuit

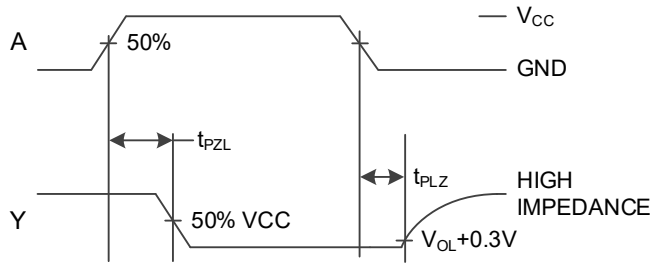

Figure3. Switching Waveforms

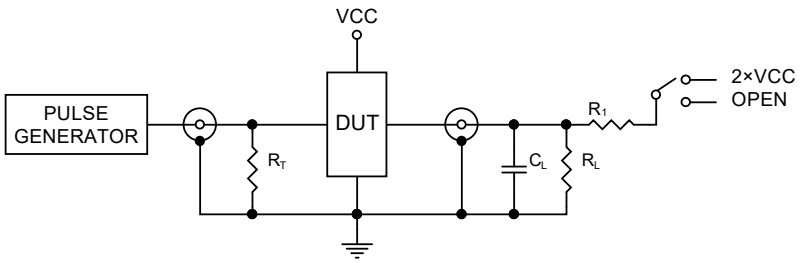

Figure4. Test Circuit R_T = 50Ω(Typ)

Package Dimension

SC70-5 (1.3mm × 2.1mm)

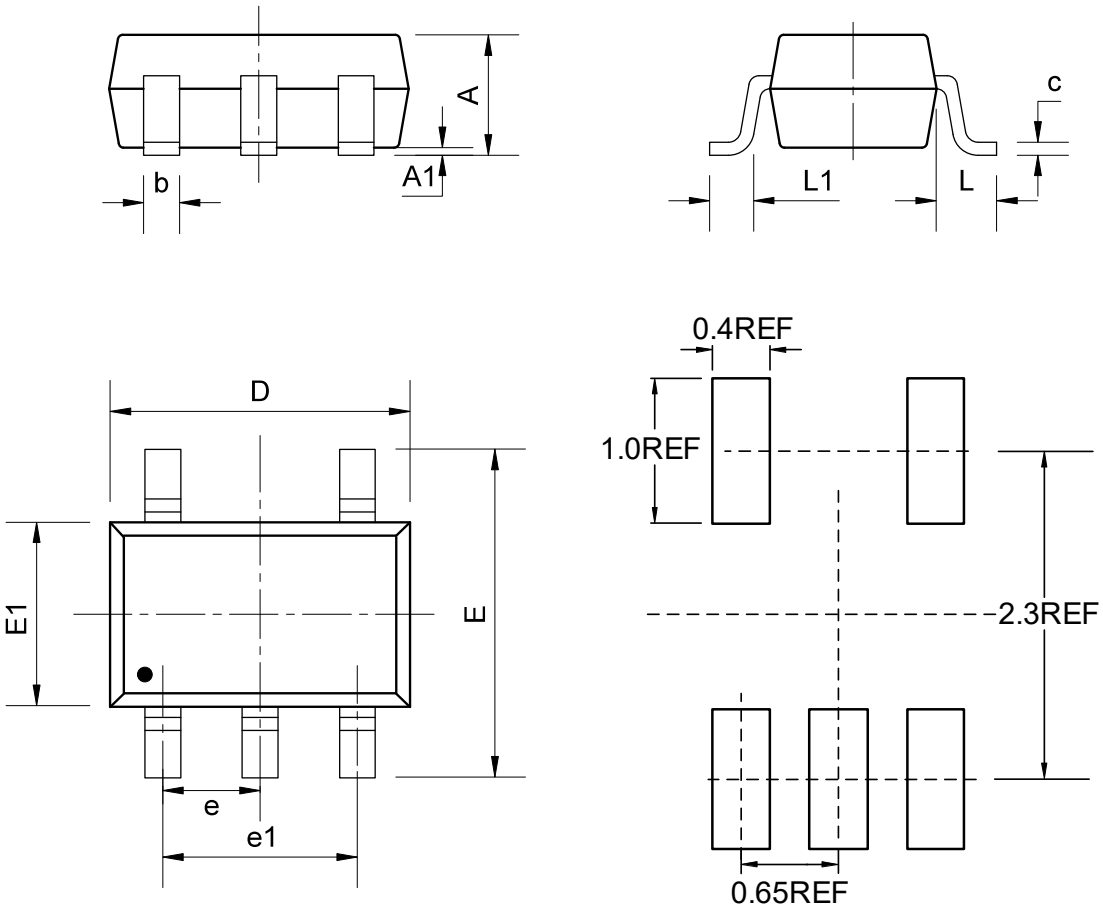

COMMON DIMENSIONS

(Unit: mm)

SYMBOL	MIN	NOM	MAX
A	-	-	1.10
A1	0.00	-	0.15
b	0.15	-	0.35
c	0.08	-	0.20
D	2.00	2.10	2.30
e	0.65BSC		
e1	1.30BSC		
E	2.15	2.30	2.50
E1	1.15	1.30	1.45
L	0.50REF		
L1	0.33REF		

SOT23-5 (1.6mm × 2.9mm)

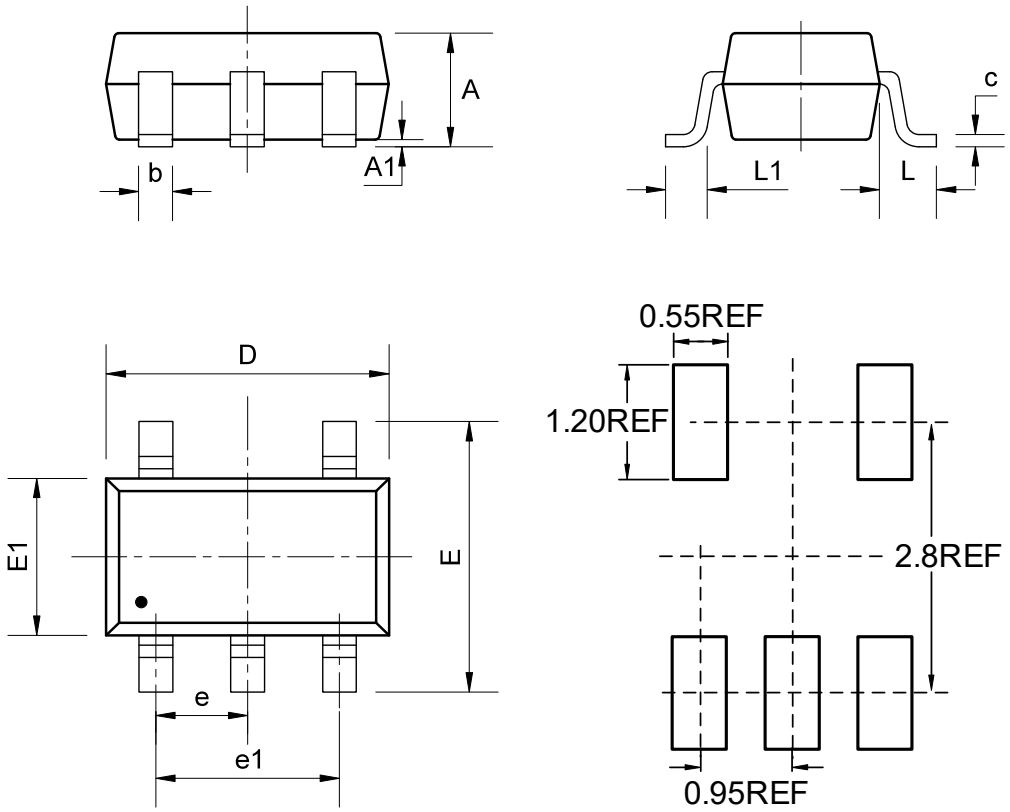

COMMON DIMENSIONS

(Unit: mm)

SYMBOL	MIN	NOM	MAX
A	-	-	1.45
A1	0.00	-	0.15
b	0.28	0.35	0.50
c	0.08	0.15	0.22
D	2.75	2.9	3.05
e	0.90	0.95	1.00
e1	1.80	1.90	2.00
E	2.60	2.80	3.00
E1	1.45	1.6	1.75
L	0.60REF		
L1	0.30	0.45	0.60

DFN6 (1.0mm × 1.5mm)

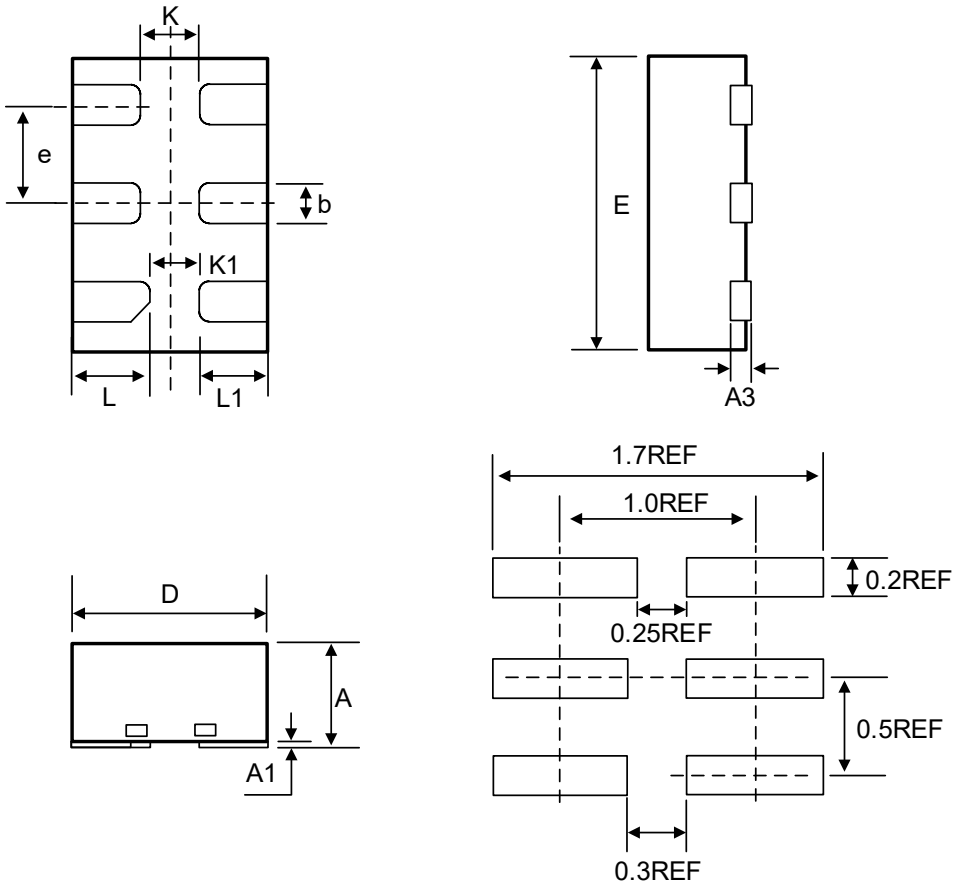

COMMON DIMENSIONS

(Unit: mm)

SYMBOL	MIN	NOM	MAX
A	0.50	--	0.60
A1	0.00	0.02	0.05
A3	0.10REF		
b	0.15	0.20	0.25
D	0.90	1.00	1.10
E	1.40	1.50	1.60
e	0.50BSC		
K	0.30REF		
K1	0.25REF		
L	0.35	0.40	0.45
L1	0.30	0.35	0.40

Tape Information

SC70-5 (1.3mm × 2.1mm)

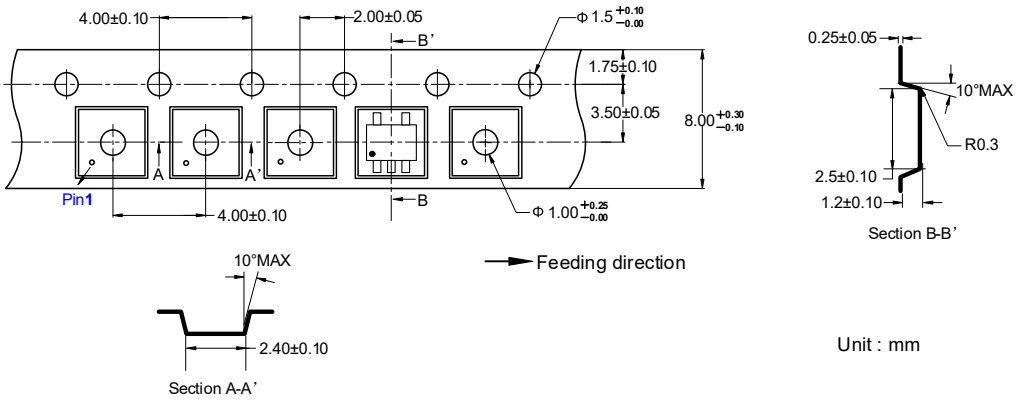

SOT23-5 (1.6mm × 2.9mm)

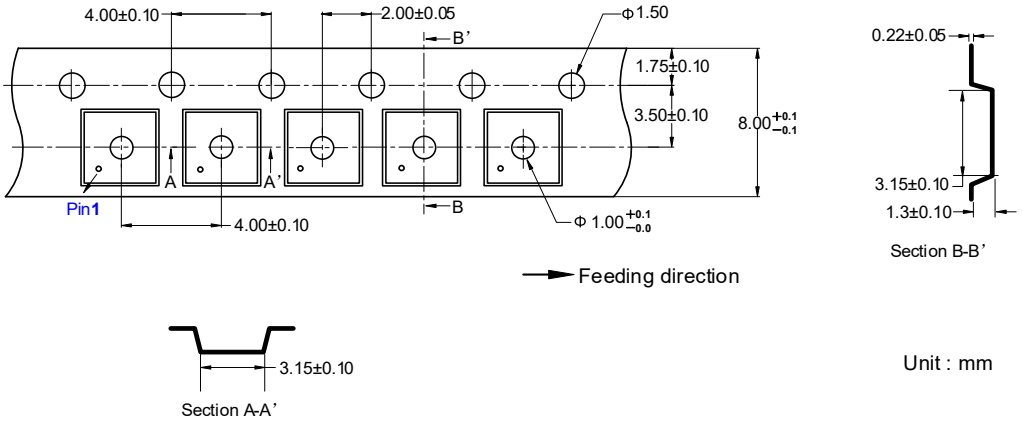

DFN6 (1.0mm × 1.5mm)

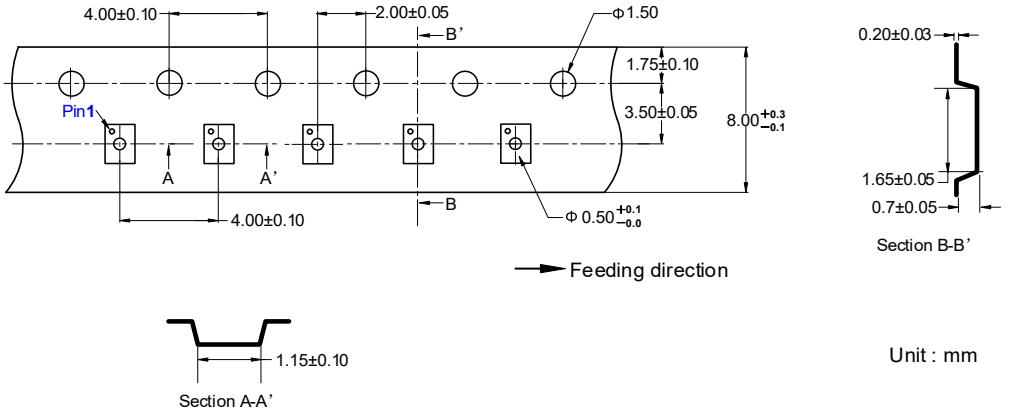

Marking Information

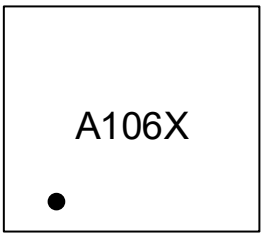

ET74AHC1G06
A106 = Part Number
X = Tracking Number

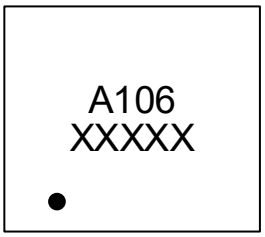

ET74AHC1G06T
A106 = Part Number
XXXXX = Tracking Number

Revision History and Checking Table

Version	Date	Revision Item	Modifier	Function & Spec Checking	Package & Tape Checking
1.0	2025-09-03	Original Version	Wang anran	Yang xiaoxu	Liu jiaying