ET6034AY - 16bit Constant Current LED Sink Driver

General Description

ET6034AY is designed for LED displays with 128 steps linear current adjustable, built-in 16 independent low-resistance color LED driver channel, each can provide 2~45mA（register fixbrit_ledn data=52H） constant current.

ET6034AY uses the I^2C BUS structure, it can adjust arbitrary channel's current by the code set.

The total 128 steps current's range is 0%~190%. OUT0~OUT5,OUT10~OUT15 every three channel share one enable switch. The RGB LED's brightness can be changed by controlling the enable switch signal.

Features

- 16 constant-current output channels
- Constant output current invariant to load voltage change
- Excellent output current accuracy:
- - Normal between channels: <±1.5% (typical); Normal between ICs: <±3% (typical)
- Output current adjusted through an external resistor
- Each channel can be adjusted its current

  - Scope：0%~190%, 128 steps, while register fixbrit_ledn data=52H current =100%
- Constant output current range:2~45mA @V_{DD}=5V ,2~30mA @V_{DD}=3.3V
- I^2C interface, four chip-address can be set
- RGB LED brightness adjustment function of any color
- Soft shutdown, shutdown current is less than 5uA@V_{DD}=5V, 3uA@V_{DD}=3.3V
- Supply voltage：2.7V～5.5V（TYP.）
- Package: QFN24(4mm ×4mm)

Pin Assignments

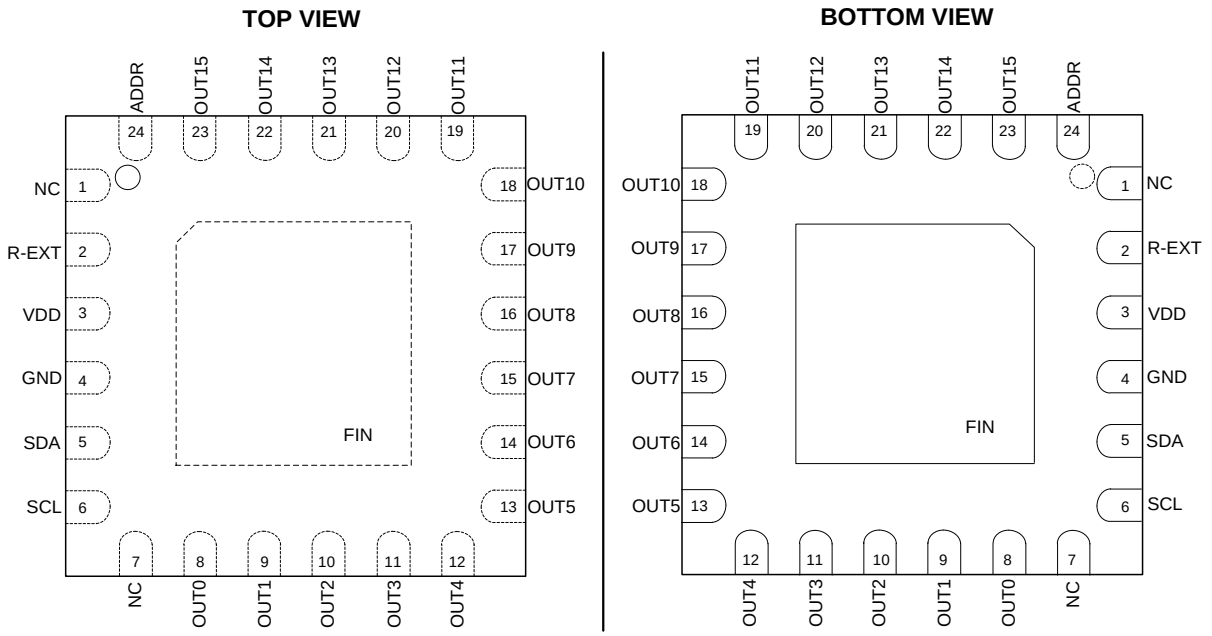

Pin. Function

No.	Name	Function
1,7	NC	No connect pin
2	R-EXT	Input terminal used to connect an external resistor for setting up output current for all output channels.
3	VDD	supply voltage terminal.
4	GND	Ground terminal for control logic and current sink.
5	SDA	I^2C data input.
6	SCL	I^2C clock input.
8~23	OUT0~OUT15	Constant current output terminals.
24	ADDR	Chip-address select.
	FIN	Heat dissipation pin ,connect to GND

Function Diagram

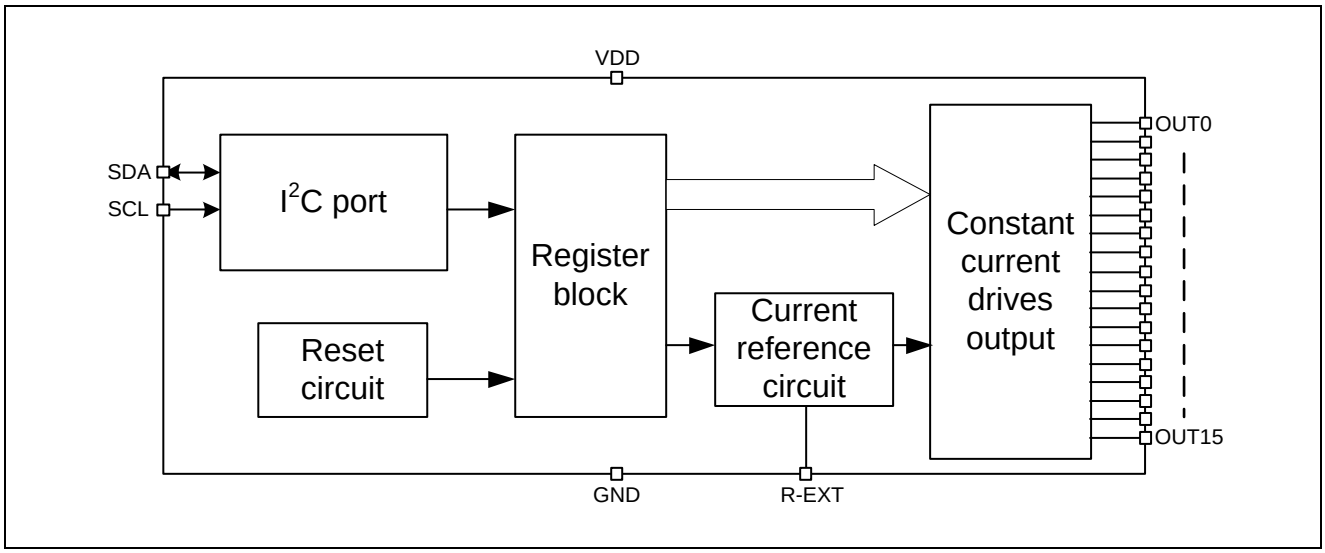

Functions Description

1. Serial Port Interface (I^2C)

Bus Interface

Baseband Processor can transmit data with ET6034AY each other through SDA and SCL port. SDA and SCL composite bus interface, and a pull-up resistor to the power supply should be connected.

Data Validity

When the SCL signal is HIGH, the data of SDA port is valid and stable. Only when the SCL signal is low, the level on the SDA port can be changed.

Start (Re-start) and Stop Working Conditions

When the SCL signal is high, SDA signal from high to low represents start or re-start working conditions, while the SCL signal is high, SDA signal from low to high represents stop working conditions.

Byte format

Each byte of data line contains 8 bits, which contains an acknowledge bit. The first data is transmitted MSB.

Acknowledge

During the writing mode, ET6034AY will send a low level response signal with one period width to the SDA port. During the reading mode, ET6034AY will not send response signal and the host will send a high response signal one period width to the SDA.

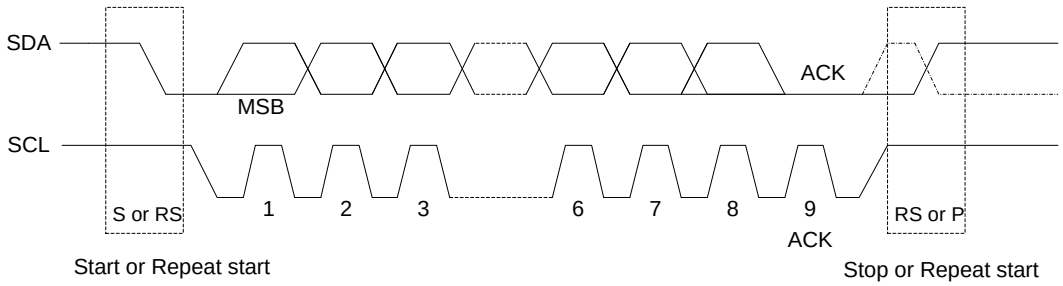

Figure1. I²C write mode

- ACK=Acknowledge
- MSB=Most Significant Bit
- S=Start Conditions RS=Restart Conditions P=Stop Conditions
- Fastest Transmission Speed =400KBITS/S
- Restart: SDA-level turnover as expressed by the dashed line waveform

Chip-Address

ET6034AY has 4 chip-address:

ADDR pin connect signal	Chip-Address	Chip address for AP with hardware I²C
VDD	4EH(write only)	Hardware I²C chip address(27H)+write(1'b0)
GND	46H(write only)	Hardware I²C chip address(23H)+write(1'b0)
SCL	4AH(write only)	Hardware I²C chip address(25H)+write(1'b0)
SDA	4CH(write only)	Hardware I²C chip address(26H)+write(1'b0)

I²C Writing Command Register Interface Protocol (continuous)：

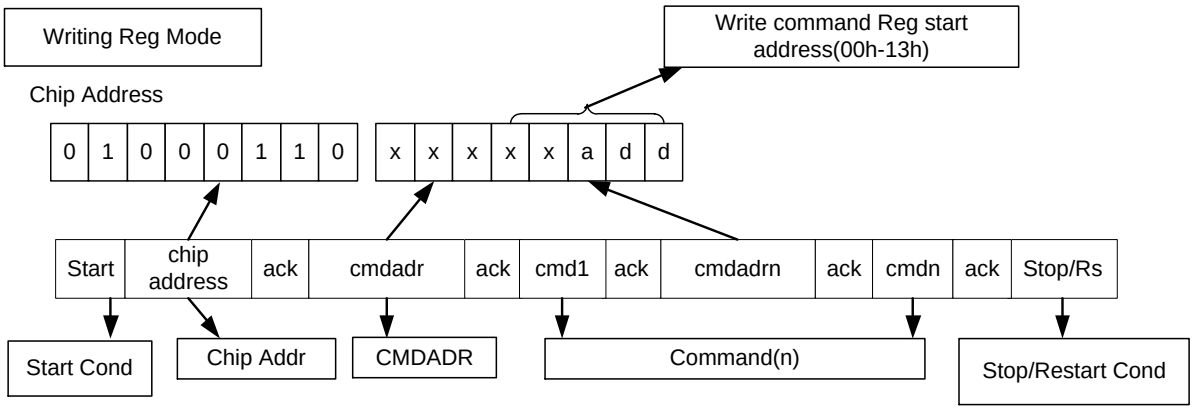

Figure2. I²C Writing Command Register Protocol

- Start Cond=Start Conditions
- Chip Addr=Chip Address=01000110b
- ACK=Acknowledge
- CMDADR= cmdadr（xxxxx + REG's 3bit address）
- ACK Acknowledge
- Command Reg data 1=（Command data cmd1）
- ACK= Acknowledge
- ……
- Command Reg data n=（Command data cmdn）
- ACK= Acknowledge
- Stop

2. Register Definition

Address	Name	Description							
00H	RSTCTR	X	X	X	X	X	X	X	Shutdown
01H	RGB_OE	X	X	rgb5_oe	rgb4_oe	rgb3_oe	rgb2_oe	rgb1_oe	rgb0_oe
02H	FIXBRIT_LED0	X	fixbrit_led0 [6:0]						
03H	FIXBRIT_LED1	X	fixbrit_led1 [6:0]						
04H	FIXBRIT_LED2	X	fixbrit_led2 [6:0]						
05H	FIXBRIT_LED3	X	fixbrit_led3 [6:0]						
06H	FIXBRIT_LED4	X	fixbrit_led4 [6:0]						
07H	FIXBRIT_LED5	X	fixbrit_led5 [6:0]						
08H	FIXBRIT_LED6	X	fixbrit_led6 [6:0]						
09H	FIXBRIT_LED7	X	fixbrit_led7 [6:0]						
0CH	FIXBRIT_LED8	X	fixbrit_led8 [6:0]						
0DH	FIXBRIT_LED9	X	fixbrit_led9 [6:0]						
0EH	FIXBRIT_LED10	X	fixbrit_led10 [6:0]						
0FH	FIXBRIT_LED11	X	fixbrit_led11 [6:0]						

10H	FIXBRIT_LED12	X	fixbrit_led12 [6:0]
11H	FIXBRIT_LED13	X	fixbrit_led13 [6:0]
12H	FIXBRIT_LED14	X	fixbrit_led14 [6:0]
13H	FIXBRIT_LED15	X	fixbrit_led15 [6:0]

Table1 Reset Control Register

Addr: 00h			Reset Register			
Addr	**Bit**	**Bit Name**	**Default**	**Access**	**Description**	
00H	0	shutdown	1b	W	Soft shutdown control	
					0b	ON
					1b	OFF(1)
	7:1	x	x	x	Don't Care	

Note(1)：Before enable shutdown bit, please set LED Enable Register to 0x00 (refer to Table 2).

Table2 LED Enable Register

Addr: 01h			LED enable Register			
Addr	**Bit**	**Bit Name**	**Default**	**Access**	**Description(2)**	
01H	0	rgb0_oe	1b	W	RGB0 LED Enable（LED0→LED2）	
					0b	OFF
					1b	ON(3)
	1	rgb1_oe	1b	W	RGB1 LED Enable（LED3→LED5）	
					0b	OFF
					1b	ON
	2	Rgb67_oe	1b	W	RGB2 LED Enable（LED6→LED7）	
					0b	OFF
					1b	ON
	3	Rgb89_oe	1b	W	RGB3 LED Enable（LED8→LED9）	
					0b	OFF
					1b	ON
	4	Rgb2_oe	1b	W	RGB2 LED Enable（LED10→LED12）	
					0b	OFF
					1b	ON
	5	Rgb3_oe	1b	W	RGB3 LED Enable（LED13→LED15）	
					0b	OFF
					1b	ON
	7:6	xx	xx	xx	xx	Don't Care

Notes：

(2) Set each LEDs' fix brightness value(constant current) according to Table3, and using the switch signal of Table 2, we can adjust the brightness of the RGB, n:0→3, RGB LED configuration is shown in application circuit figure.

(3) If table 2 switch is always on, we also can adjust each LED's brightness by changing the data of Table 3.

Table 3 Fix Brightness（constant current）Register

Addr: 02→13h			Fix Brightness Register		
Addr	**Bit**	**Bit Name**	**Default**	**Access**	**Description**
02H→09H 0CH→13H	6:0	fixbrit_ledn (4)(5)	00h	W	Fix Brightness value（constant current）
					00h OFF
					01h Slightly Brightness
					…… （Brightness higher in turn）
					7FH Highest Brightness
	7	x	x	x	Don't Care

Notes：

(4) n: 0→15

(5) LEDn: LED0→LED15, the LED position shown in application circuit figure.

3. Constant Current

In LED display application, ET6034AY provides nearly no variations in current from channel to channel and from IC to IC. This can be achieved by:

(1) The maximum normal current variation between channels is less than ±1.5%(typical), and that between ICs is less than ±3%(typical).

(2) The output current can be kept constant regardless of the variations of LED forward voltages (Vf). This performs as a perfection of load regulation.

4. Adjusting Output Current

The output current of each channel (I_{OUT}) is set by an external resistor R_{EXT}. The relationship between I_{OUT} and R_{EXT} is shown in the following figure.

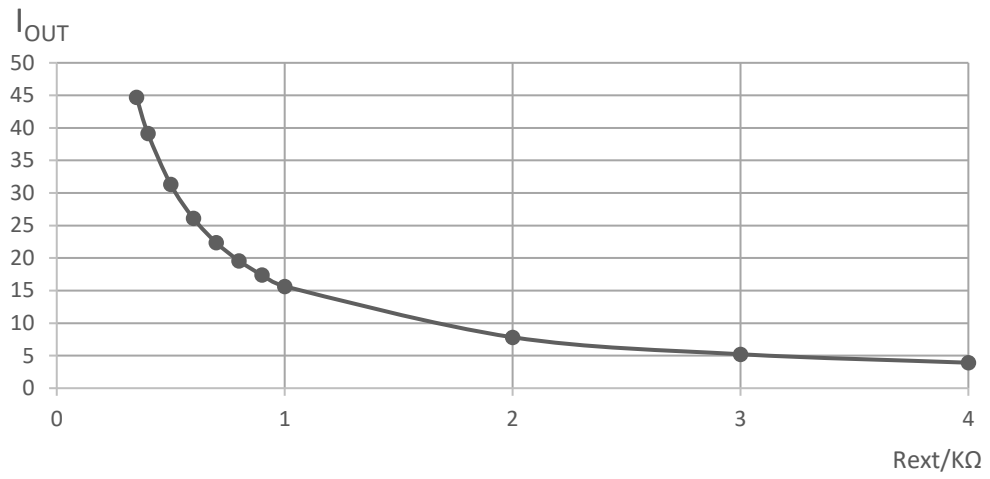

Figure3. R_{EXT} VS I_{OUT} (OUT Current)

(1) The output current can be calculated from the following formula (brightness data is 1010010):

$V_{R\text{-}EXT}$ = 1.24V； I_{OUT} = ($V_{R\text{-}EXT}$ / R_{EXT})×12.625

REXT is the external resistor connected to R-EXT terminal and $V_{R\text{-}EXT}$ is the voltage of R-EXT terminal.

When R_{EXT} =1240Ω, the magnitude of current is around 12.625mA.

(2) Current gain adjustable bits: DA6~DA0:

Default value is 0000000(all the current gain is relative to brightness 1010010).

Small current mode range (0000000~1000000), current range is 0%~64%, there have 65 steps.

Big current mode range (1000001~1111111), current range is 66%~190%, there have 63 steps.

The current formula is (D is the result of 6-bit binary current value convert to 10 decimal value)

Small current mode: gain = D/100

Big current mode: gain = (2D+64)/100

Cur_data vs Cur_per as follow:

Cur_data	Cur_per	Cur_data	Cur_per	Cur_data	Cur_per	Cur_data	Cur_per
00H	0.00%	20H	32.00%	40H	64.00%	60H	128.00%
01H	1.00%	21H	33.00%	41H	66.00%	61H	130.00%
02H	2.00%	22H	34.00%	42H	68.00%	62H	132.00%
03H	3.00%	23H	35.00%	43H	70.00%	63H	134.00%
04H	4.00%	24H	36.00%	44H	72.00%	64H	136.00%
05H	5.00%	25H	37.00%	45H	74.00%	65H	138.00%
06H	6.00%	26H	38.00%	46H	76.00%	66H	140.00%
07H	7.00%	27H	39.00%	47H	78.00%	67H	142.00%
08H	8.00%	28H	40.00%	48H	80.00%	68H	144.00%
09H	9.00%	29H	41.00%	49H	82.00%	69H	146.00%
0AH	10.00%	2AH	42.00%	4AH	84.00%	6AH	148.00%
0BH	11.00%	2BH	43.00%	4BH	86.00%	6BH	150.00%
0CH	12.00%	2CH	44.00%	4CH	88.00%	6CH	152.00%
0DH	13.00%	2DH	45.00%	4DH	90.00%	6DH	154.00%
0EH	14.00%	2EH	46.00%	4EH	92.00%	6EH	156.00%
0FH	15.00%	2FH	47.00%	4FH	94.00%	6FH	158.00%
10H	16.00%	30H	48.00%	50H	96.00%	70H	160.00%
11H	17.00%	31H	49.00%	51H	98.00%	71H	162.00%
12H	18.00%	32H	50.00%	52H	100.00%	72H	164.00%
13H	19.00%	33H	51.00%	53H	102.00%	73H	166.00%
14H	20.00%	34H	52.00%	54H	104.00%	74H	168.00%
15H	21.00%	35H	53.00%	55H	106.00%	75H	170.00%
16H	22.00%	36H	54.00%	56H	108.00%	76H	172.00%
17H	23.00%	37H	55.00%	57H	110.00%	77H	174.00%
18H	24.00%	38H	56.00%	58H	112.00%	78H	176.00%
19H	25.00%	39H	57.00%	59H	114.00%	79H	178.00%
1AH	26.00%	3AH	58.00%	5AH	116.00%	7AH	180.00%
1BH	27.00%	3BH	59.00%	5BH	118.00%	7BH	182.00%
1CH	28.00%	3CH	60.00%	5CH	120.00%	7CH	184.00%
1DH	29.00%	3DH	61.00%	5DH	122.00%	7DH	186.00%
1EH	30.00%	3EH	62.00%	5EH	124.00%	7EH	188.00%
1FH	31.00%	3FH	63.00%	5FH	126.00%	7FH	190.00%

Note: When the user use ET6034AY, can according to the use of current scope to determine the resistor of R-EXT port, and then adjust the current by change the data of Fix Brightness Registers refer to the table above.

The following figure show as two modes of current:

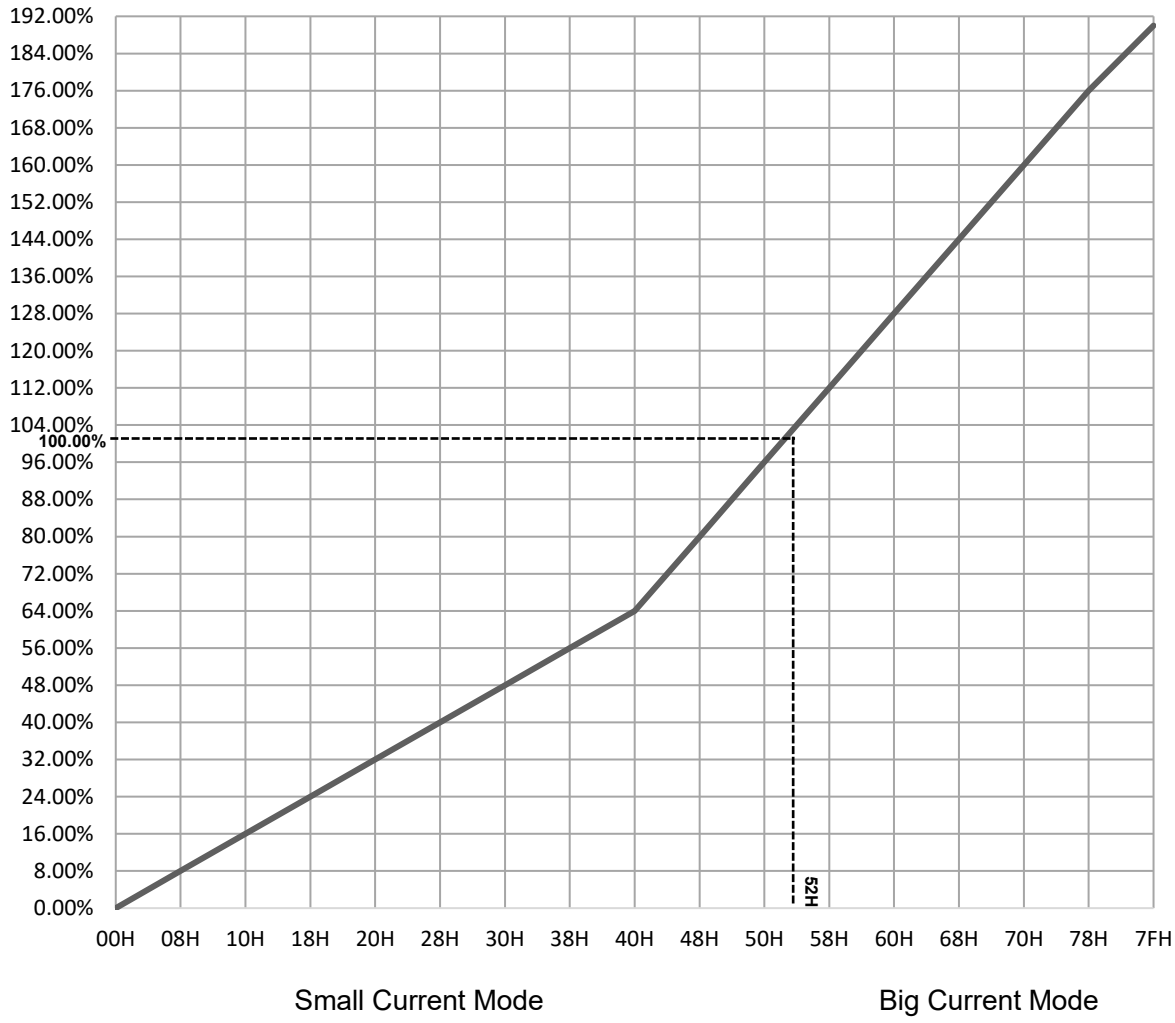

Figure 4.

Absolute Maximum Ratings

Characteristic	Symbol	Rating	Unit
Supply Voltage	V_{DD}	0～6.0	V
Input Voltage	V_{IN}	-0.4～V_{DD} +0.4	V
Output Current	I_{OUT}	+45	mA
Clock Frequency	F_{CLK}	400	kHz
GND Terminal Current	I_{GND}	+1000	mA
Operating Junction Temperature	T_J	-40～+150	°C
Storage Temperature	T_{STG}	-65～+150	°C

***Note*:** Continuous operation at 6.0V is supported.

Recommended Operating Conditions

Symbol	Item	Rating	Unit
V_{IN}	Input Voltage	2.7 to 5.5	V
I_{OUT}	Output Current	0 to 45	mA
F_{CLK}	Clock Frequency	100	kHz
T_A	Operating Ambient Temperature	-40 to 85	°C

Electrical Characteristics (V_{DD}=5V ,T_A=25°C)

Characteristic		Symbol	Condition		Min.	Typ.	Max.	Unit
Supply Voltage		V_{DD}	-		4.5	5.0	5.5	V
Output Current		I_{OUT}	DC Test Circuit		2	-	45	mA
Output Leakage Current		I_{OH}	V_{OH} =V_{DD}		-	-	0.5	μA
Output Current 1		I_{OUT1}	V_{DS} =1.0V	R_{EXT} =1240Ω	-	12.625	-	mA
Current Skew (between channels)		dI_{OUT1}	I_{OL}=12.625mA V_{DS} =1.0V	R_{EXT} =1240Ω	-	±1.5	±6	%
Output Current 2		I_{OUT2}	V_{DS} =1.0V	R_{EXT} = 620Ω	-	25.25	-	mA
Current Skew (between channels)		dI_{OUT2}	I_{OL}=25.25mA V_{DS} =1.0V	R_{EXT} = 620Ω	-	±1.5	±6	%
Current Skew (between ICs)		dI_{OUT3}	I_{OL}=25.25mA V_{DS} =1.0V	R_{EXT} = 620Ω		±3	±10	%
Output Current vs. Output Voltage Regulation		%/dV_{DS}	V_{DS} within 1.0V to 3.0V		-	±4	-	%
Output Current vs. Supply Voltage Regulation		%/dV_{DD}	V_{DD} within 4.5V to 5.5V		-	±2	-	%
Soft shutdown Current		$I_{DD(SSD)}$			-	-	5	μA
Input High Voltage		V_{IH}			1.5V	-	-	V
Input Low Voltage		V_{IL}			-	-	0.5	V
Supply Current	“OFF”	I_{DD} (off)1	R_{EXT}= Floating OUT0～OUT15=Off		-	0.65	2.5	mA
		I_{DD} (off)2	R_{EXT} =1240Ω, OUT0～OUT15=Off		-	3.5	6.0	
		I_{DD} (off)3	R_{EXT}=827Ω, OUT0～OUT15=Off		-	4.6	7.0	
	“ON”	I_{DD} (on)1	R_{EXT}=1240Ω, OUT0～OUT15=On		-	3.5	6.0	
		I_{DD} (on)2	R_{EXT}=827Ω, OUT0～OUT15=On			4.6	7.0	

Electrical Characteristics (V_{DD}=3.3V, T_A=25°C)

Characteristic		Symbol	Condition		Min.	Typ.	Max.	Unit
Supply Voltage		V_{DD}	-		2.7	3.3	4.5	V
Output Current		I_{OUT}	DC Test Circuit		2	-	30	mA
Output Leakage Current		I_{OH}	V_{OH} =V_{DD}		-	-	0.5	μA
Output Current 1		I_{OUT1}	V_{DS} =1.0V	R_{EXT} =1.54kΩ	-	10	-	mA
Current Skew (between channels)		dI_{OUT1}	I_{OL}=10mA V_{DS} =1.0V	R_{EXT}=1.54kΩ	-	±1.5	±6	%
Output Current 2		I_{OUT2}	V_{DS} =1.0V	R_{EXT}=770Ω	-	20	-	mA
Current Skew (between channels)		dI_{OUT2}	I_{OL}=20mA V_{DS} =1.0V	R_{EXT}=770Ω	-	±1.5	±6	%
Current Skew (between ICs)		dI_{OUT3}	I_{OL}=20mA V_{DS} =1.0V	R_{EXT}=770Ω		±4	±10	%
Output Current vs. Output Voltage Regulation		%/dV_{DS}	V_{DS} within 1.0V to 3.0V		-	±5	-	%
Output Current vs. Supply Voltage Regulation		%/dV_{DD}	V_{DD} within 3.0V to 3.6V		-	±2	-	%
Soft Shutdown Current		$I_{DD(SSD)}$			-	-	3	μA
Supply Current	“OFF”	I_{DD} (off)1	R_{EXT}= Floating, OUT0～OUT15=Off		-	0.5	2.0	mA
		I_{DD} (off)2	R_{EXT}=2540Ω, OUT0～OUT15=Off		-	1.8	5.0	
		I_{DD} (off)3	R_{EXT}=1270Ω, OUT0～OUT15=Off		-	3.5	6.0	
	“ON”	I_{DD} (on)1	R_{EXT} =2540Ω, OUT0～OUT15=On		-	1.8	5.0	
		I_{DD} (on)2	R_{EXT}=1270Ω, OUT0～OUT15=On			3.5	6.0	

I²C Mode Timing

Symbol	Parameter	Min	Typ	Max	Unit
F_{SCL}	SCL Clock Frequency	0	-	400	KHz
t_{BUF}	Bus Free Time Between a STOP and START Condition	1.3	-	-	μs
$t_{HD:STA}$	Hold Time(Repeated) START Condition	0.6	-	-	μs
t_{LOW}	Low Period of SCL Clock	1.3	-	-	μs
t_{HIGH}	HIGH Period of SCL Clock	0.6	-	-	μs
$t_{SU:STA}$	Setup Time for a Repeated START Condition	0.6	-	-	μs
$t_{HD:DAT}$	Data Hold Time	-	-	0.9	μs
$t_{SU:DAT}$	Data Setup Time	100	-	-	ns
t_R	Data Hold Time	20+0.1Cb	-	300	ns
t_F	Data Hold Time	20+0.1Cb	-	300	ns
$t_{SU:STO}$	Setup Time for STOP Condition	0.6	-	-	μs

***Note*:** Cb=total capacitance of one bus line in pF.

I²C mode Timing Diagram

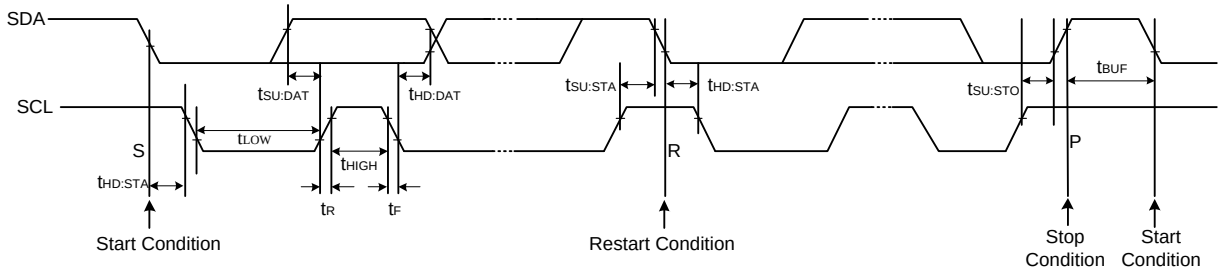

Figure 5.

Application circuit

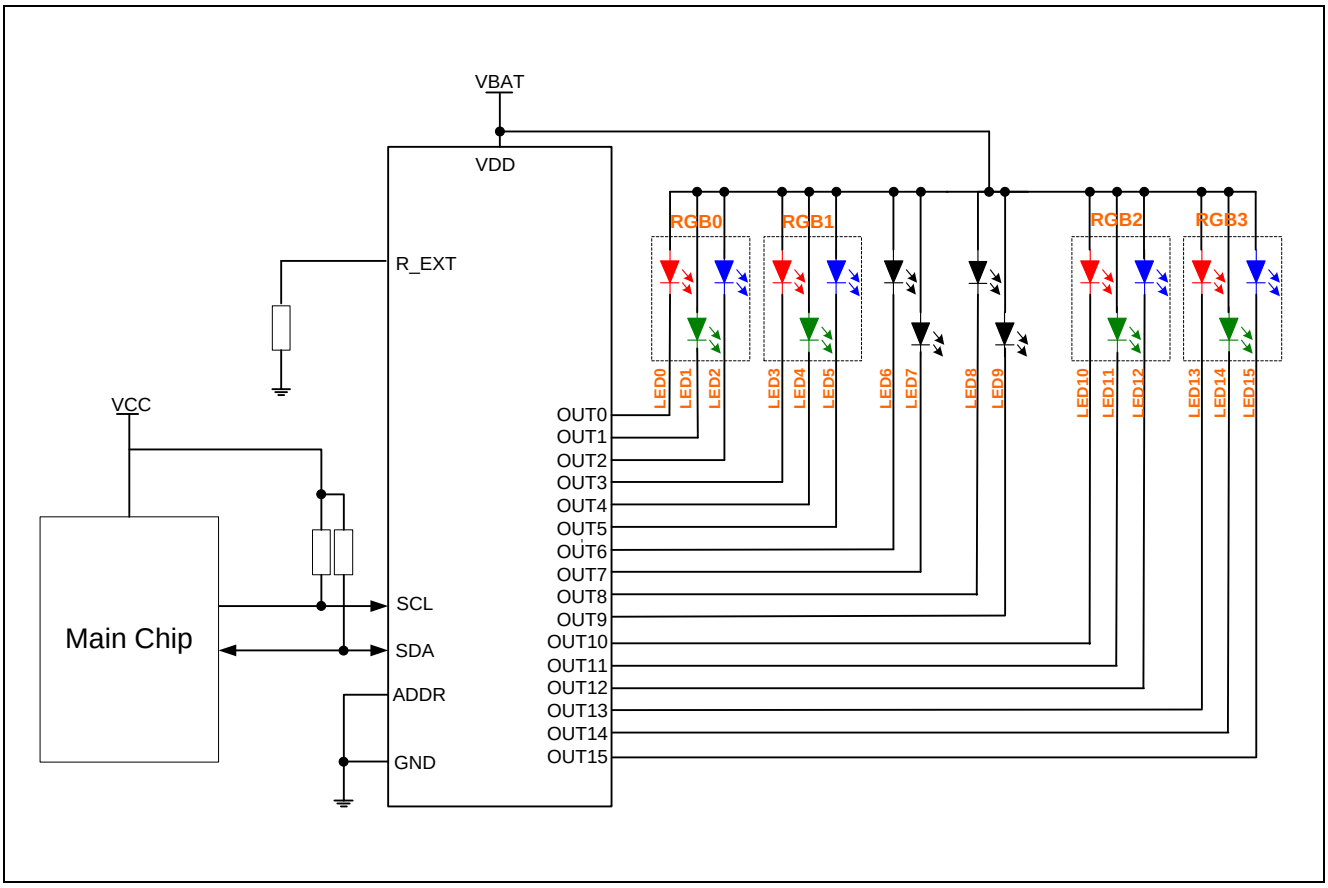

Note*: This application circuit is only for reference

Package Dimension

QFN24

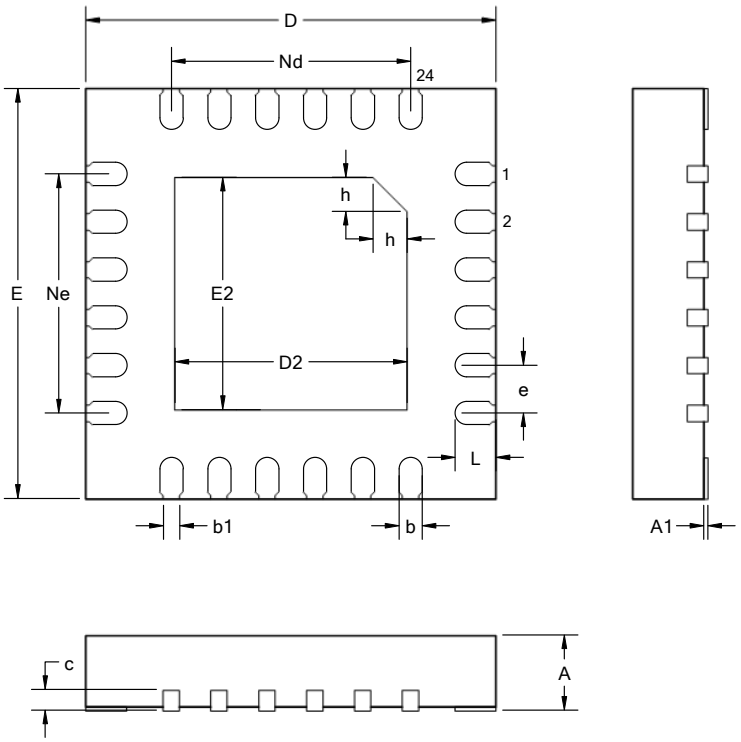

Unit: mm

Symbol	Min	Nom	Max
A	0.70	0.75	0.80
A1	-	0.02	0.05
b	0.18	0.25	0.30
b1		0.18REF	
c	0.18	0.20	0.25
D	3.90	4.00	4.10
D2	2.40	2.50	2.60
e		0.50BSC	
Ne		2.50BSC	
Nd		2.50BSC	
E	3.90	4.00	4.10
E2	2.40	2.50	2.60
L	0.35	0.40	0.45
h	0.30	0.35	0.40

Revision History and Checking Table

Version	Date	Revision Item	Modifier	Function & Spec Checking	Package & Tape Checking
1.0	2016-07-22	Original Version	Shi Liang Jun	Shi Liang Jun	Zhu Jun Li
1.1	2016-08-10	Update Package Dimension	Shi Liang Jun	Shi Liang Jun	Zhu Jun Li
1.2	2019-01-08	Update Output current value	Shi Liang Jun	Shi Liang Jun	Zhu Jun Li
1.3	2019-04-10	Update some parameters	Shi Liang Jun	Shi Liang Jun	Zhu Jun Li
1.4	2021-11-19	Update V_{HL}	Shi Liang Jun	Shi Liang Jun	Zhu Jun Li
1.5	2022-1-4	Update Package Dimension	Shi Liang Jun	Shi Liang Jun	Zhu Jun Li
1.6	2022-11-1	Update form	Shi Bo	Shi Liang Jun	Zhu Jun Li
1.7	2026-6-5	Update QFN24 Package Dimension	Tian QiHe	Li Chen Xuan	Liu JiaYing