ET51628BAM - High PSRR Low Noise 300mA LDO

General Description

The ET51628BAM is the 300mA LDO with auto discharge function, It uses an advanced CMOS process and a PMOSFET pass device to achieve high power supply rejection ratio (PSRR), low noise, low dropout, low ground current, fast start-up and excellent output accuracy.

The ET51628BAM is stable with a 1.0μF ceramic output capacitor, uses a precision voltage reference and feedback loop to achieve excellent Regulation and transient response.

The ET51628BAM offered in a small SOT23-5 package and operates over an ambient temperature range of -40°C to +105°C.

Features

- Wide Input Voltage Range from 1.9V to 5.5V
- Up to 300mA Load Current
- Standard Fixed Output Voltage 2.8V
- Very Low I_Q is 45μA typical
- Low Dropout is typical 200mV@2.8V at 300mA Load
- Very High PSRR: 75dB at 1KHz
- Very Low Noise is 60uVrms
- Auto discharge function
- Excellent Load/Line Transient Response
- Automotive AEC-Q100 Grade 2 Qualified
- Package Information:

Part No.	Package	MSL
ET51628BAM	SOT23-5	Level 1

Applications

- Automotive constant-voltage power supply
- Automotive infotainment and cluster

Pin Configuration

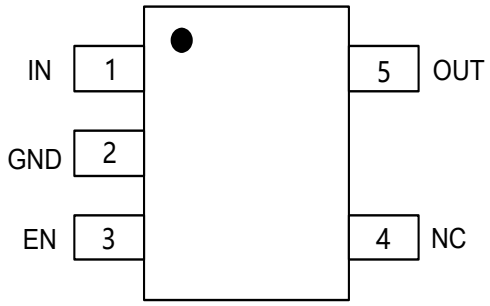

Top View

Pin Function

Pin No.	Pin Name	Pin Function
1	IN	Supply input pin. Must be closely decoupled to GND with a 1μF or greater ceramic capacitor
2	GND	Ground
3	EN	Enable control input, active high. Do not leave EN floating
4	NC	No connection.
5	OUT	Output pin. A 1μF low-ESR capacitor should be connected to this pin to ground.

Block Diagram

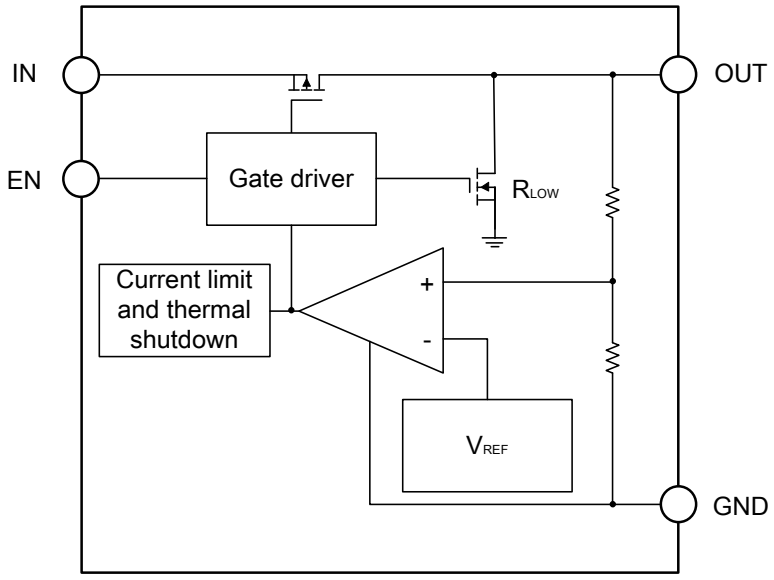

Functional Description

Input Capacitor

A 1μF ceramic capacitor is recommended to connect between VIN and GND pins to decouple input power supply glitch and noise. The amount of the capacitance may be increased without limit. This input capacitor must be located as close as possible to the device to assure input stability and less noise. For PCB layout, a wide copper trace is required for both VIN and GND.

Output Capacitor

An output capacitor is required for the stability of the LDO. The recommended output capacitance is from 0.47μF to 4.7μF, Equivalent Series Resistance (ESR) is from 5mΩ to 100mΩ, and temperature characteristics is X7R or X5R. Higher capacitance values help to improve load/line transient response. The output capacitance may be increased to keep low undershoot/overshoot. Place output capacitor as close as possible to OUT and GND pins.

ON/OFF Input Operation

The ET51628BAM is turned on by setting the EN pin high, and is turned off by pulling it low. If this feature is not used, the EN pin should be tied to IN pin to keep the regulator output on at all time.

Ultra Fast Start-up

After enabled, the ET51628BAM is able to provide full power in as little as tens of microseconds, typically 80μs. This feature will help load circuitry move in and out of standby mode in real time.

Current Limit Protection

When output current at the OUT pin is higher than current limit threshold or the OUT pin, the current limit protection will be triggered and clamp the output current to approximately 500mA to prevent over-current and to protect the regulator from damage due to overheating.

Thermal shutdown Protection

Thermal protection disables the output when the junction temperature rises to approximately +155°C, allowing the device to cool down. When the junction temperature reduces to approximately +130°C the output circuitry is enabled again. Depending on power dissipation, thermal resistance, and ambient temperature, the thermal protection circuit may cycle on and off. This cycling limits the heat dissipation of the regulator, protecting it from damage due to overheating.

Layout Guidelines

- Place input and output capacitors as close to the device as possible.
- Use copper planes for device connections in order to optimize thermal performance.
- Place thermal vias around the device to distribute heat.

Layout Examples

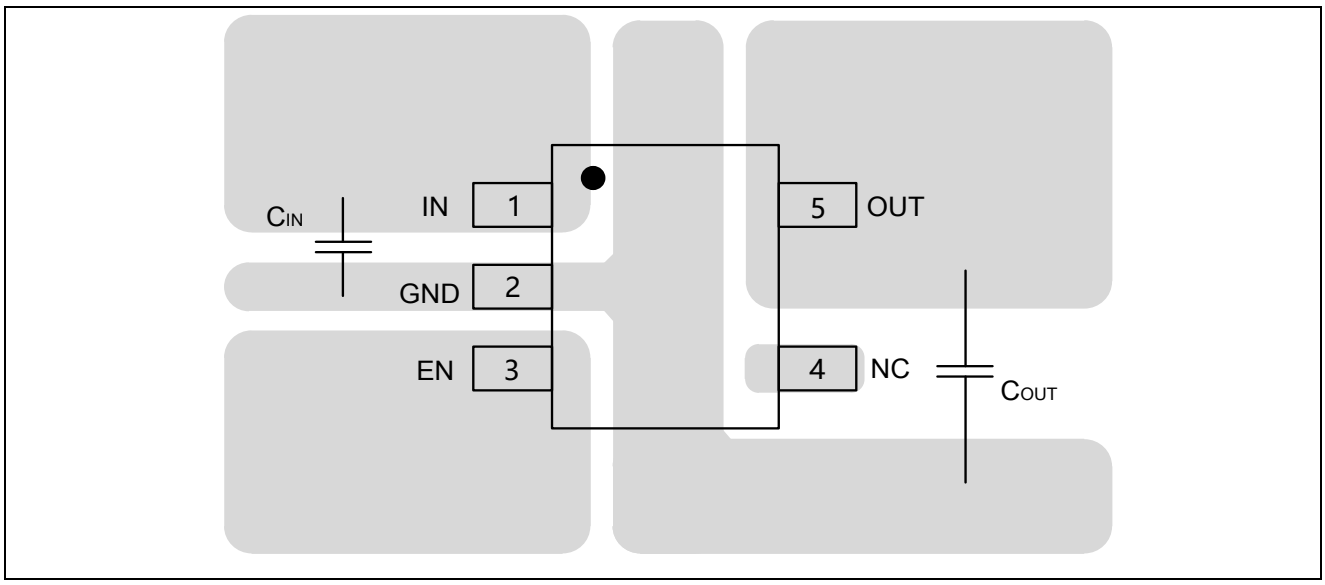

Absolute Maximum Ratings

Symbol	Parameters (Items)	Value	Unit
V_{IN}	IN Voltage	-0.3 to 6.5	V
V_{EN}	Input Voltage (EN Pin)	-0.3 to V_{IN}+0.3	V
V_{OUT}	Output Voltage	-0.3 to V_{IN}+0.3	V
I_{MAX}	Maximum Load Current	500	mA
P_D	Maximum Power Consumption	500	mW
ESD	Human Body Model (per AEC−Q100−002)	±4000	V
	Charged Device Model (per AEC−Q100−011)	±1500	
$R_{\theta JA}$	Junction-to-ambient thermal resistance	250	°C/W
T_J	Operating Junction Temperature	-40 to 150	°C
T_{STG}	Storage Temperature	-65 to 150	°C
T_{SLOD}	Lead Temperature (Soldering, 10 sec)	300	°C

Recommended Operating Conditions

Symbol	Parameters	Rating	Unit
V_{IN}	Input Voltage	1.9 to 5.5	V
I_{OUT}	Output Current	0 to 300	mA
T_A	Operating Ambient Temperature	-40 to 105	ºC
C_{IN}	Effective Input Ceramic Capacitor Value	0.47 to 4.7	µF
C_{OUT}	Effective Output Ceramic Capacitor Value	0.47 to 4.7	µF
ESR	Input and Output Capacitor Equivalent Series Resistance (ESR)	5 to 100	mΩ

Electrical Characteristics

V_{IN}=V_{EN}=V_{OUT}+1V, I_{OUT}=1mA, C_{IN}=C_{OUT}=1μF, T_A = -40°C ~ 105°C, unless otherwise noted.
Typical values are at T_A = +25°C.

Symbol	Parameters	Conditions	Min	Typ	Max	Unit
V_{IN}	Input Voltage Range[1]		1.9		5.5	V
V_{DROP}	Dropout Voltage[2]	V_{OUT}=2.8V, I_{OUT}=300mA		200	400	mV
I_{Q_ON}	Input Quiescent Current	Active mode: V_{EN}=V_{IN}		45	70	μA
$I_{Q\ OFF}$	Input Shutdown Current	V_{EN}=0V		0.01	1	μA
V_{OUT}	Regulated Output Voltage	I_{OUT}=1mA, -40°C≤T_A≤105°C	-2		2	%
ΔV_{OUT}	Output Voltage Line Regulation	V_{IN}=V_{OUT}+1V to 5.5V, I_{OUT}=10mA		0.03	0.2	%/V
	Output Voltage Load Regulation	I_{OUT} from 0mA to 300mA		20	40	mV
T_S	Soft-start Time	From enable to power on		80		μs
I_{LIMIT}	Current Limit	R_{LOAD}=1Ω	300			mA
I_{SHORT}	Short Current Limit	V_{OUT}=0V		70		mA
PSRR	Power Supply Rejection Ratio[3]	f=1kHz, C_{OUT}=1μF, I_{OUT}=20mA		75		dB
		f=10kHz, C_{OUT}=1μF, I_{OUT}=30mA		65		dB
e_N	Output Noise[3]	10Hz to 100kHz, I_{OUT}=200mA, C_{OUT}=1μF		60		μV_{RMS}
V_{IL}	EN Low Threshold	V_{IN}=1.9V to 5.5V, V_{EN} falling until the output is disabled			0.3	V
V_{IH}	EN High Threshold	V_{IN}=1.9V to 5.5V, V_{EN} rising until the output is enabled	1.2			V
I_{EN}	EN Pin Input Current	V_{EN}=5.5V		0	0.1	μA
R_{PD}	EN pull-down resistance		0.8	1	1.3	MΩ
R_{LOW}	Output resistance of auto discharge at off state	EN=0V, V_{IN}=4V, I_{OUT}=10mA		80		Ω
T_{TSD}	Over-temperature Shutdown Threshold[3]	T_J rising		155		°C
T_{HYS}	Over-temperature Shutdown Hysteresis[3]	T_J falling from shutdown		20		°C

Electrical Characteristics (Continued)

V_{IN}=V_{EN}=V_{OUT}+1V, I_{OUT}=1mA, C_{IN}=C_{OUT}=1μF, T_A = -40°C ~ 105°C, unless otherwise noted.
Typical values are at T_A = +25°C.

Symbol	Parameters	Conditions	Min	Typ	Max	Unit
TRANSIENT CHARACTERISTICS						
ΔV_{OUT}[3]	Line transient	V_{IN}=3.8V to 5.5V in 10us		5		mV
		V_{IN}=5.5V to 3.8V in 10us		5		mV
	Load transient	I_{OUT}=1mA to 300mA in 10us		40		mV
		I_{OUT}=300mA to 1mA in 10us		40		mV

Note (1). Here V_{IN} means internal circuit can work normal. If V_{IN}<V_{OUT}, Output voltage follow V_{IN}(I_{OUT}=1mA), circuit is safety.

Note (2). V_{DROP} FT test method: test the V_{OUT} voltage at V_{OUT}+$V_{DROPMAX}$ with 300mA output current.

Note (3). Guaranteed by design and characterization. not a FT item.

Typical Characteristics

(V_{IN}=3.8V; I_{OUT}=1mA, C_{IN}=C_{OUT}=1.0μF, unless otherwise noted, T_A=25°C.)

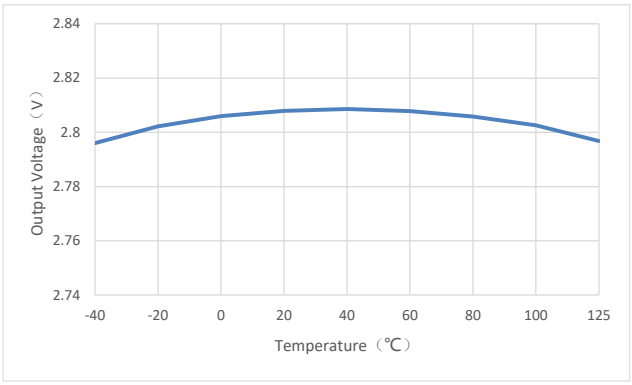

Output Voltage VS Temperature

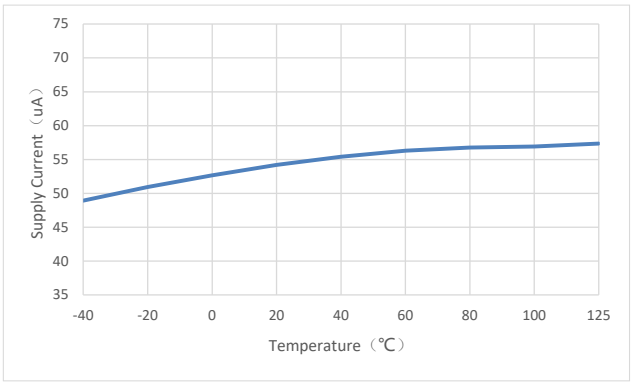

Supply Current VS Temperature

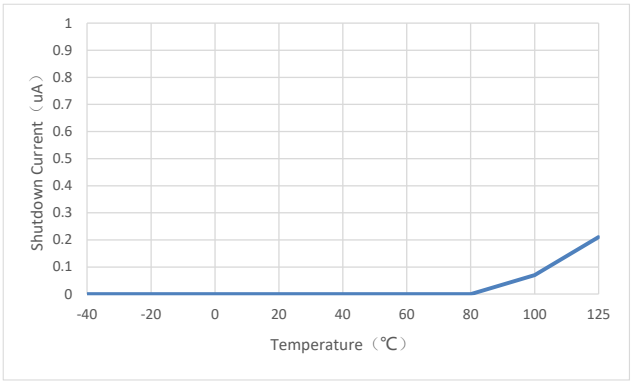

Shutdown Current VS Temperature

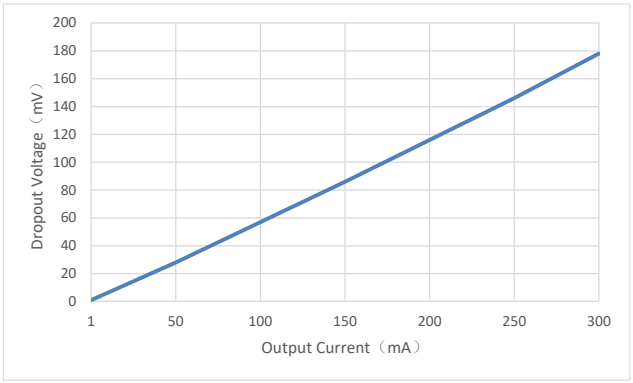

Dropout Voltage VS Output Current

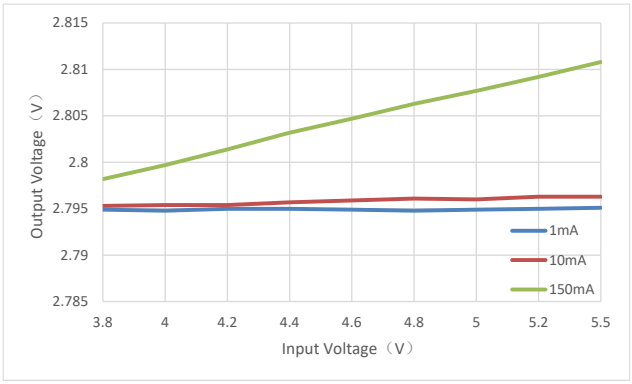

Output Voltage VS Input Voltage

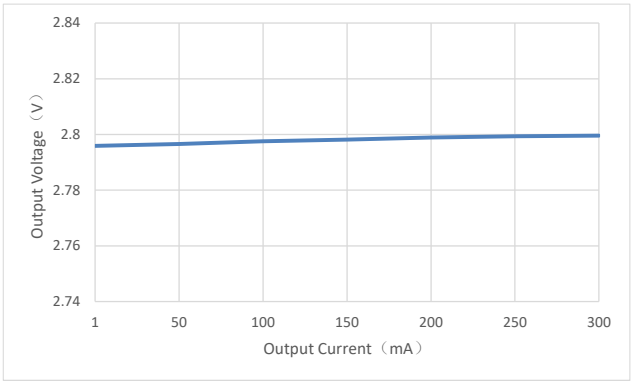

Output Voltage VS Output Current

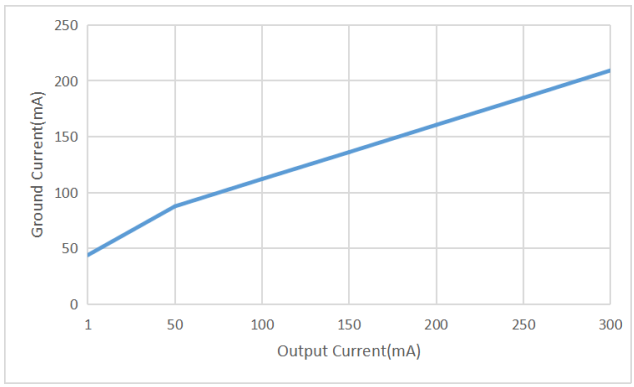

Ground Current VS Output Current

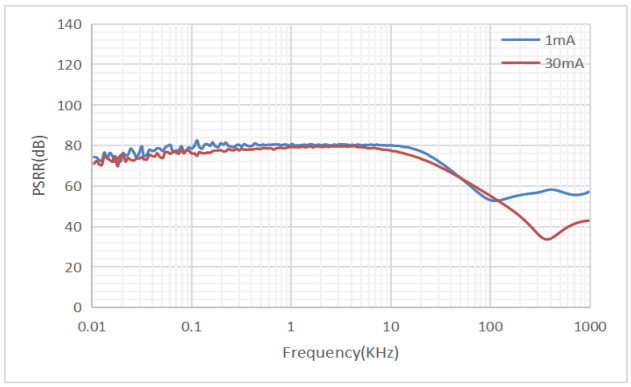

PSRR VS Output Current

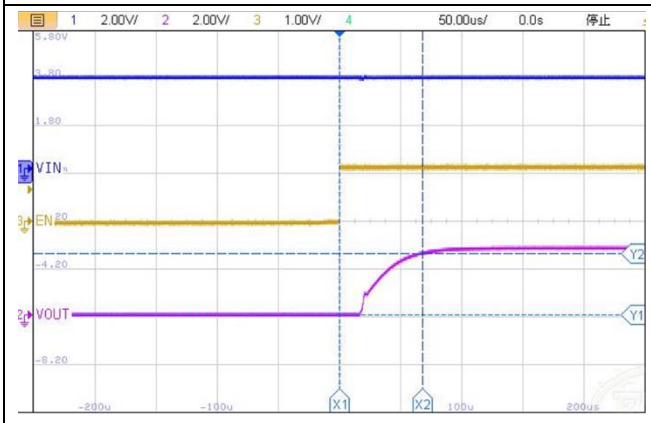

Turn On Speed VS EN Voltage (I_{OUT}=30mA)

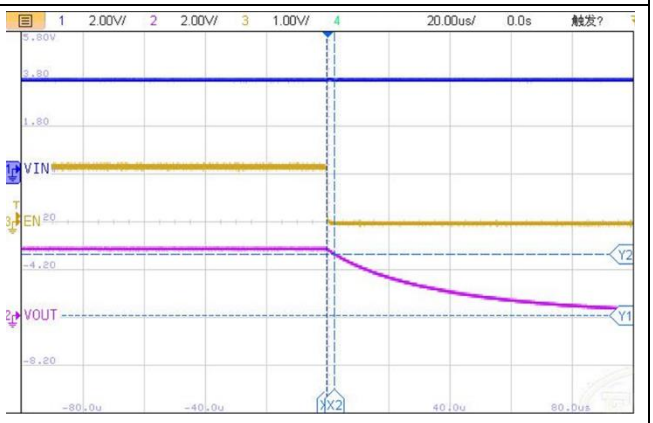

Turn Off Speed VS EN Voltage (I_{OUT}=30mA)

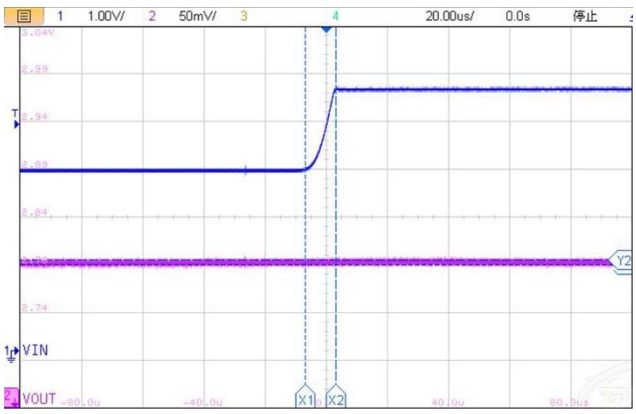

Line Transient Response

V_{IN}=3.8V~5.5V, V_{OUT}=2.8V, I_{OUT}=1mA

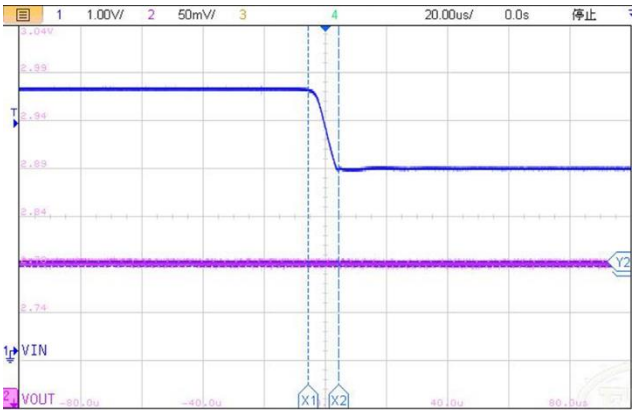

Line Transient Response

V_{IN}=5.5V~3.8V, V_{OUT}=2.8V, I_{OUT}=1mA

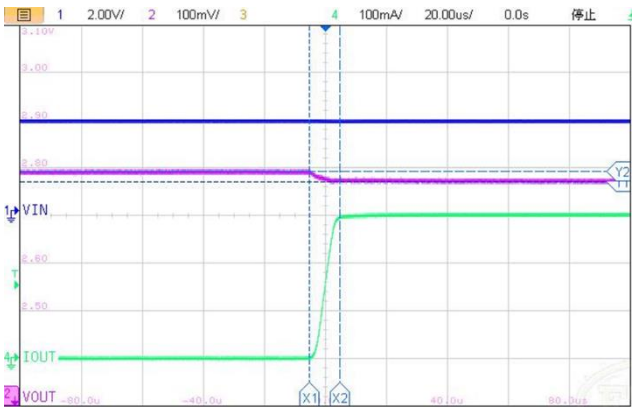

Load Transient Response

V_{IN}=3.8V, V_{OUT}=2.8V, I_{OUT}=1mA~300mA

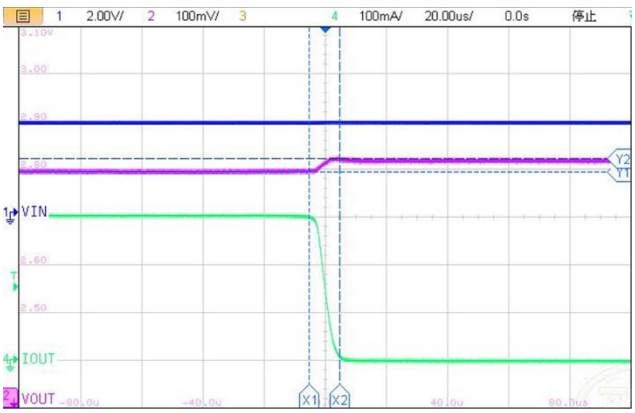

Load Transient Response

V_{IN}=3.8V, V_{OUT}=2.8V, I_{OUT}=300mA~1mA

Application Circuits

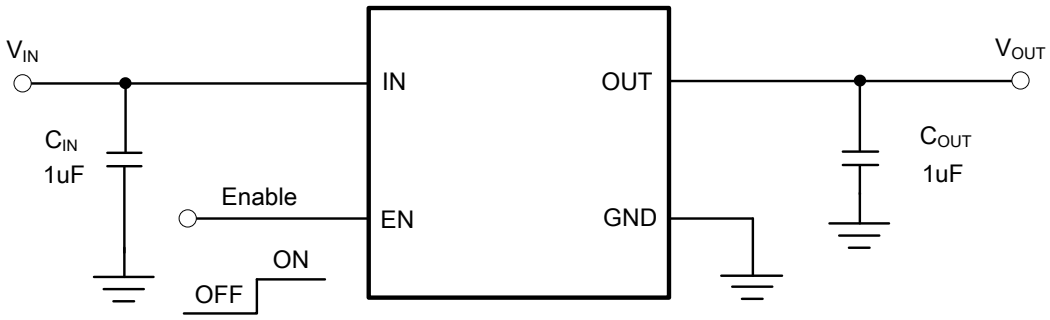

Package Dimension

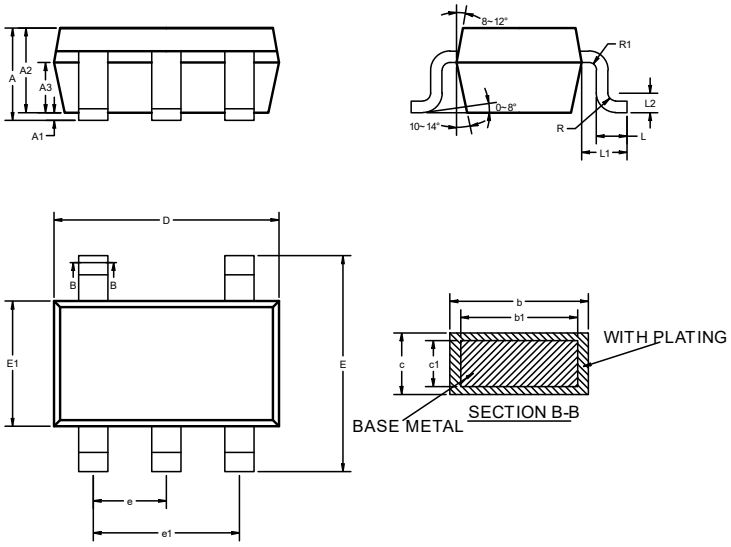

COMMON DIMENSIONS

(UNITS OF MEASURE=MILLIMETER)

SYMBOL	MIN	NOM	MAX
A	—	—	1.250
A1	0	—	0.150
A2	1.000	1.100	1.200
A3	0.600	0.650	0.700
b	0.360	—	0.450
b1	0.350	0.380	0.410
c	0.140	—	0.200
c1	0.140	0.150	0.160
D	2.826	2.926	3.026
E	2.600	2.800	3.000
E1	1.526	1.626	1.726
e	0.900	0.950	1.000
e1	1.800	1.900	2.000
L	0.300	0.400	0.500
L1	0.590REF		
L2	0.250BSC		
R	0.050	—	0.200
R1	0.050	—	0.200

Revision History and Checking Table

Version	Date	Revision Item	Modifier	Function & Spec Checking	Package & Tape Checking
1.0	2022-12-08	Original Version	Yang Xiao Xu	Liuxm	Yang Xiao Xu